Secrets of Pocket Hole Joinery

old-Up Bench • Garden Lattice Screens • Tile-Top Table

Woodsmith®

Vol. 23 / No. 136

SECTIONAL Entertainment Center

Plus:
Three Outdoor Projects
Build One This Weekend
Garden Lattice Screens • Tile-Top Table • Fold-Up Bench

www.woodsmith.com

Woodsmith

No. 136 August, 2001

Publisher Donald B. Peschke
Editor Terry J. Strohman
Senior Editor Jon Garbison
Assistant Editor Brian McCallum
Contrib. Editor Craig Ruegsegger
Art Director Todd Lambirth
Senior Illustrators David Kreyling, Dirk Ver Steeg, Harlan V. Clark
Graphic Intern Jonathan Eicke

CREATIVE RESOURCES
Creative Director: Ted Kralicek • *Project Developer:* Ken Munkel • *Sr. Project Designer:* Kent Welsh • *Project Designers:* Chris Fitch, Craig Iseke • *Shop Craftsmen:* Steve Curtis, Steve Johnson • *Sr. Photographer:* Crayola England

SPECIAL PUBLICATIONS
Corp. VP: Douglas L. Hicks • *Art Director:* Douglas A. Flint • *Senior Graphic Designer:* Chris Glowacki • *Assoc. Editor:* Craig Ruegsegger • *Assistant Editors:* Joel A. Hess, Joseph E. Irwin • *Graphic Designer:* Vu Nguyen • *Graphic Intern:* Matt O'Gara

CIRCULATION
Subscriber Services Director: Sandy Baum • *New Business Manager:* Wayde Klingbeil • *Multi-media Promotion Manager:* Rick Junkins • *Promotion Analyst:* Patrick Walsh • *Renewal Mgr.:* Paige Rogers • *Billing & Collections Manager:* Rebecca Cunningham • *Circ. Marketing Analyst:* Kris Schlemmer • *Assoc. Circ. Marketing Analyst:* Paula M. DeMatteis • *Sr. Graphic Designers:* Mark Hayes, Robin Friend

CORPORATE SERVICES
VP of Finance: Mary R. Scheve • *Controller:* Robin Hutchinson • *Sr. Account.:* Laura Thomas • *Accts. Payable:* Mary J. Schultz • *Accts. Receivable:* Margo Petrus • *Production Dir.:* George Chmielarz • *Electronic Publishing Director:* Douglas M. Lidster • *Network Administrator:* Cris Schwanebeck • *Pre-press Image Specialists:* Troy A. Clark, Minniette Johnson • *New Media Mgr.:* Gordon C. Gaippe • *Web Site Art Dir.:* Gene Pedersen • *Technology Analyst:* Carol Schoeppler • *Web Content Mgrs.:* David Briggs, Sue M. Moe • *Web Designer:* Kara Blessing • *Professional Development Dir.:* Michal Sigel • *H.R. Asst.:* Kirsten Koele • *Office Mgr.:* Noelle Carroll • *Receptionist:* Jeanne Johnson • *Mail Room/Delivery:* Lou Webber

WOODSMITH MAIL ORDER
Operations Director: Bob Baker • *Customer Service Mgr.:* Jennie Enos • *Warehouse Supr.:* Nancy Johnson • *Buyer:* Linda Jones • *Tech. Service Rep.:* Johnny Audette • *Admin. Assist.:* Nancy Downey • *Cust. Serv. Reps.:* Tammy Truckenbrod, Ed Arthur, Anna Cox, Deborah Rich, April Revell, Valerie Riley, Linda Stepp • *Warehouse:* Sylvia Carey, Nancy Connelly, Mary Couch, Dustin Hess, Sheryl Knox, Mike Overby, Al Voigt

WOODSMITH STORE
Mgr.: Dave Larson • *Asst. Manager:* Tim Thelen • *Sales Staff:* Wendell Stone, Jim Barnett, Kathy Smith, Larry Morrison, Harold Cashman, Mark Johnson, Gregory Kauzlarich, Joe Kucera • *Office Mgr.:* Vicki Edwards

Woodsmith® (ISSN 0164-4114) is published bimonthly (Feb., Apr., June, Aug., Oct., Dec.) by August Home Publishing Company, 2200 Grand, Des Moines, IA 50312.
Woodsmith® is a registered trademark of August Home Publishing.

Copyright© 2001 August Home Publishing Company. All rights reserved.

Subscriptions: Single copy: $4.95. One year subscription (6 issues), $24.95. (Canada/International add $10 per year, U.S. funds.)
Periodicals Postage Paid at Des Moines, IA and at additional offices. USPS/Perry-Judd's Heartland Division Automatable Poly.
Postmaster: Send change of address to *Woodsmith*, Box 37112, Boone, IA 50037-2112.
Subscription Questions? Write to *Woodsmith*, P.O. Box 842, Des Moines, IA 50304-9961 or call 1-800-333-5075, 8:00 am to 5:00 pm, Central Time, weekdays. Or send an e-mail to: orders@woodsmith.com
E-Mail: woodsmith@woodsmith.com
World Wide Web: http://www.Woodsmith.com

Printed in U.S.A.

EDITOR'S COLUMN

SAWDUST

While attending a woodworking show a few years back, there was one particular demonstration I kept coming back to. The thing that intrigued me about it was that in just a few hours a large dining room cabinet had been assembled from start to finish.

The secret had to do with a special joinery technique that was used — a pocket screw joint. With this type of joinery, angled holes are drilled in one face of a workpiece. Then the two mating pieces are screwed together. It's a fast and easy way to assemble a project. (For more on this, see page 18.)

Ever since that woodworking show, I've been kicking around the idea of featuring a project (or two) in *Woodsmith* that uses this technique. But one thing kept nagging at me — the holes for the pocket screws. I didn't want to see the large, elongated holes every time I looked at the project.

So we came up with a couple of pocket hole projects designed to keep the holes out of sight. Be sure to check out the Sectional Entertainment Center that begins on page 6 and the Tile-Top Table starting on page 22. I think you'll like what you see (and what you don't see).

SURVEY. While I think these projects are interesting, I'd really like to know what *you* think of them — and the other articles and projects in this issue. So if you'd like to give us some feedback, please go to www.Woodsmith.com and check out our "*Woodsmith* Readers' Review" survey.

Or you can send a SASE to *Woodsmith* Readers' Review, August Home Publishing Co., 2200 Grand Ave., Des Moines, IA 50312, and we'll mail you a copy of the survey to fill out and return to us.

HELP WANTED. One last thing. We're looking for another project designer to join the August Home team here in Des Moines. This position requires an in-depth knowledge of furniture design, woodworking joinery, and home construction. Plus, you'll need to be able to create detailed, computer-aided shop drawings.

If this sounds like the perfect position for you, please contact: Ted Kralicek, August Home Publishing Co., 2200 Grand Ave., Des Moines, IA 50312. FAX (515) 282-6741. Or you can go to our corporate website at www.AugustHome.com and look under the "Job Openings" section.

Terry

Woodsmith Readers' Gallery

Visit other *Woodsmith* subscribers' workshops, and see photos of the projects they've built. It's all online in the new Readers' Gallery on the *Woodsmith* web site:
www.Woodsmith.com

We want you to be part of the Readers' Gallery! To submit photos of your favorite *Woodsmith* projects or views of your shop, follow the instructions you'll find at the gallery.

A LOOK INSIDE

CONTENTS

Features

Sectional Entertainment Center 6

Since one size rarely fits all, this attractive entertainment center is designed as three separate units. You can build just one section, or all three — whatever you need for your TV and accessories. We even give you plans for adding optional glass doors.

Pocket Hole Joinery 18

Looking for a joinery method that's fast, strong, and straightforward? Pocket holes just may be the answer. In this article, we'll guide you through setting up and using a pocket hole jig and give you some clever tips for getting the best results.

Tile-Top Table 22

Dimensional lumber and pocket hole construction allow you to build this project in a weekend. A ceramic tile that's inset in the top of the table provides a durable surface with a dash of color.

Folding Bench 26

A clever design and strong, but lightweight, construction make this folding bench perfect for taking along on trips or outings. Weather-resistant lumber and hardware also make it ideal for the garden.

Garden Lattice Screens 32

Built with dimensional lumber and basic joinery, this weekend project is like a room divider for your backyard. Fasten together as many of these lattice screens as you like to create an intimate outdoor setting or to hide an unattractive view.

Entertainment Center page 6

Tile-Top Table page 22

Folding Bench page 26

Departments

Tips & Techniques 4
Shop Notes 25
Sources 35

Garden Lattice Screens page 32

TIPS & TECHNIQUES

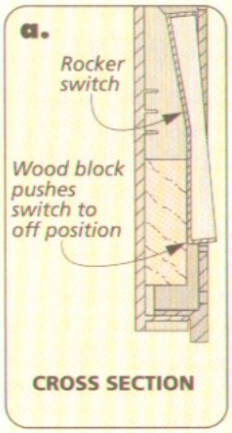

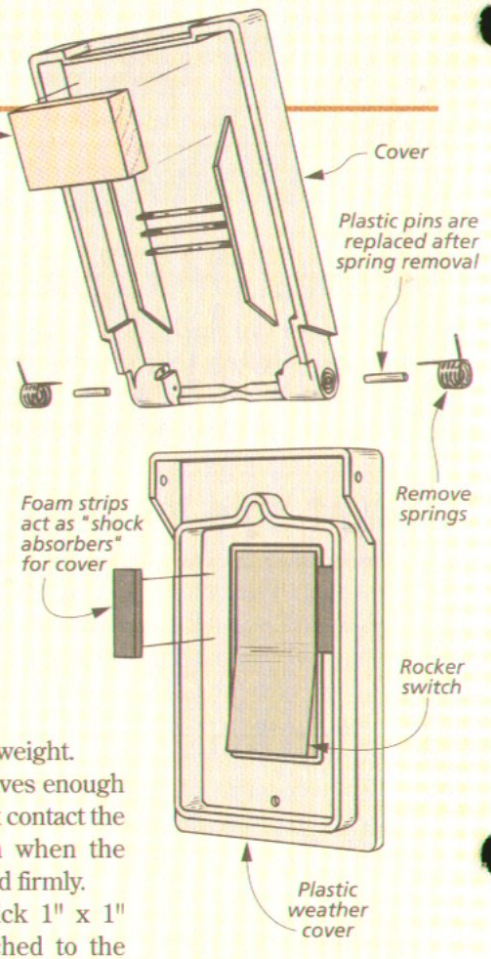

Router Switch

When mounting an on/off switch to my shop built router table, I wanted one that was easy to reach and turn off without having to take my eye off the bit and work piece. My design is a combination that works very well and is easy to make with available electrical hardware.

Use a protective weather cover and a rocker-style switch that works in an ordinary single electrical box. To make the two work together, you have to remove the springs that close the cover by taking the pins out that holds the cover together, see drawing. To do this push them out from the inside using a small drill bit.

Then using the self-adhesive foam insulation seal that came with the weather cover, placed two small strips on either side of the switch.

These act as "shock absorbers" to prevent the switch from turning off when the cover closes under its own weight.

The foam gives enough to let the block contact the rocker switch when the cover is pushed firmly.

This 1/4"-thick 1" x 1" block is attached to the underside of the cover with some double-sided carpet tape. The block is positioned to contact the switch when closed. The tape allows me to move the block if needed to test it. Gluing it wouldn't allow for adjustments.

To use the switch I lift the cover and turn it on, but to turn off my router, I simply push the cover.

Ted Hendy
Sierra Vista, Arizona

Editor's Note: If you are not familiar with basic electrical principles, you should seek the advice of a licensed electrician before doing any wiring.

FREE
Online Tips

If you'd like even more woodworking tips, the solution is simple. Just visit us at our web site and sign up to receive a free tip via email every week.

www.woodsmith.com

Sanding Disc Holder Storage

Often sanding discs tend to curl up when not in use. I find this a real pain when trying to place a PSA disc on my sander and I don't get it on straight the first time. I came up with a small shop jig that helped keep them flat. Take two pieces of wood 6" x 6" and clamp them together. Then trace two holes opposite from one another, using one of the discs as a template. Now drill 5/16" holes. In the base, glue in 3"-long 5/16" dowels to reach through a stack of discs and into the cap. The holes in the cap should be oversized. The cap puts weight on the discs to keep them flat. You can even add extra weight to make sure they stay flat.

Henry Previs
King William, Virginia

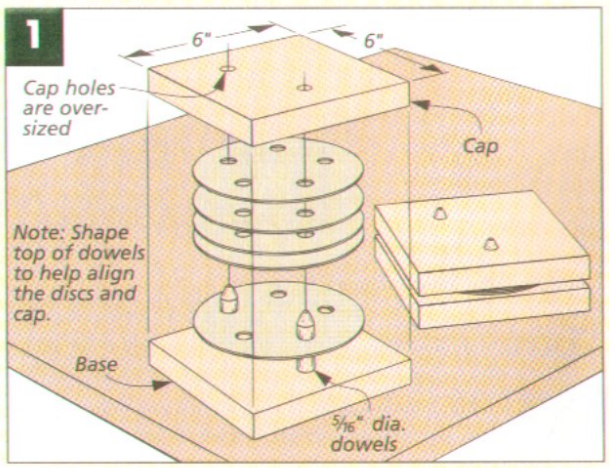

Router Crank Handle Adjustment

The fine adjustment knob on my plunge router was small and difficult to use. I replaced mine with a window crank for easy adjustment and better control.

I purchased a window crank at my local hardware store. Since they come in several sizes, check to see if it matches the shaft on your router. The shaft on my router just happened to be 3/8", which is a standard crank size. Then to make the crank fit better, I reamed out the splines in the crank with a 3/8" bit. Part of the shaft on my router is flat, so the set screw on the crank locks it in place.

One of the advantages to the crank is when I mount the router under a table. The handle is easy to find and adjust.

Milt Schmidt
Sunnyvale, California

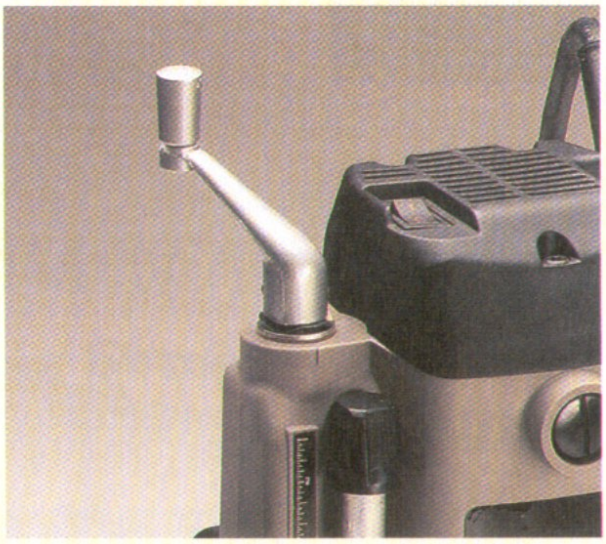

PVC Dust Collector Attachment

Recently when building my own router table and fence, I found that an ordinary 3" to 1 1/2" PVC reducer would work great as a dust collector port. The advantage is it connects easily to a standard shop vacuum with an inexpensive 2" vacuum adapter.

The larger 3" side of the reducer is mitered at a 45° in both directions (see Fig 1a). I did this at my bandsaw by tilting the table to 45° for the first cut. Then return the table to 90° for the second cut. This should yield a 90° angle to attach to a fence. It won't be centered, but that's alright.

I made mine to attach to a shop-made router fence. Small #4 x 1 1/4" screws attached it to the fence. The best way to do this was to drill through the fence and into the reducer.

George Glading
Dover, Delaware

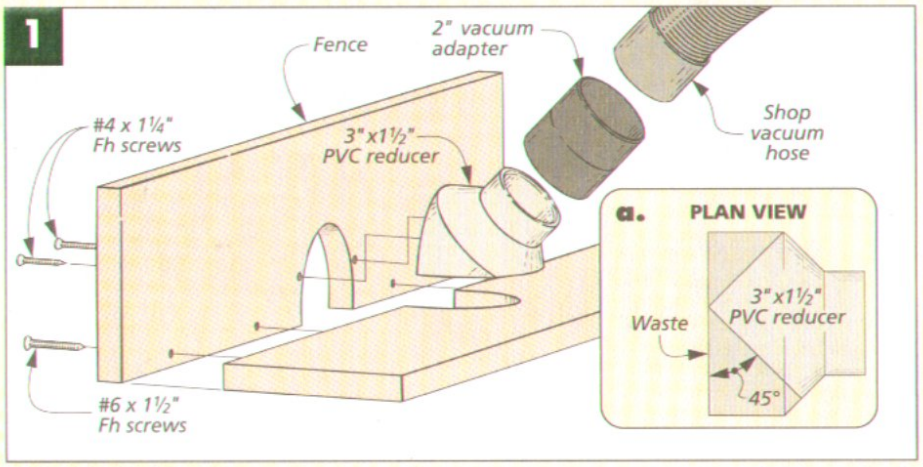

▲ *A PVC reducer is cut to fit the fence and works with ordinary shop vacuums for router dust collection.*

QUICK TIPS

HAND CLEANER

For years I've been using a homemade hand cleaner that works. The recipe is a just equal parts of dry powder laundry detergent and cornmeal. The dry soap does the cleaning while the cornmeal adds the abrasive needed to get that stubborn dirt off. It works similar to a pumice soap, but you can make it for next to nothing.

Charles Schuster
Juneau, Wisconsin

PUTTY LEVELER

After buying an after market dado blade insert for my saw, I found that it wasn't level with the saw table. Without any way to adjust it, my solution was to use some small pieces of plumbers' putty. First, ball up some putty and put it on the saw insert supports. Then put the insert in place and level it with a rolling pin.

Steve Beckle
Aurora, Illinois

SUBMIT YOUR TIPS

If you have an original shop tip, we would like to hear from you and consider publishing your tip in one or more of our publications. Just write down your tip and mail it to: *Woodsmith,* Tips and Techniques, 2200 Grand Avenue, Des Moines, Iowa 50312. Please include your name, address, and daytime phone number in case we have any questions. If you would like, FAX it to us at 515-282-6741 or send us an email message at: woodsmith@woodsmith.com. We will pay up to $200 if we publish your tip.

FEATURE PROJECT

SECTIONAL ENTERTAINMENT CENTER

This contemporary project was built with pocket hole joinery — a "new" technique that required some clever cover-ups.

It's easy to see how practical this project is. The top is a large, solid wood panel that will hold a fairly good-sized TV, and inside there's plenty of storage space for all of your home entertainment components. Even the back has been carefully designed to provide room for organizing cables.

Plus, there are also smaller side cabinets that can be built and set next to the main TV cabinet, as shown in the inset photo. Or to give the components a little more protection, you can build a pair of inset, glass-paneled doors (page 13).

But it's what you *can't* see that I'm excited about. That's because this project was built almost exclusively with pocket hole screws, refer to the detail on the next page.

This has been my first experience with pocket hole joinery, and I wanted to see what could be built with it. But since this project is an "open" design, I didn't want to have any pocket holes showing. This meant coming up with a number of creative solutions for covering them up. But the final result was worth it — not a pocket hole in sight.

▲ *Build a set of matching side cabinets that can be set right next to the main TV case or can "stand alone." To see this side cabinet in a different light, turn to page 14.*

Construction Details

OVERALL DIMENSIONS:
42"W x 24"D x 28"H

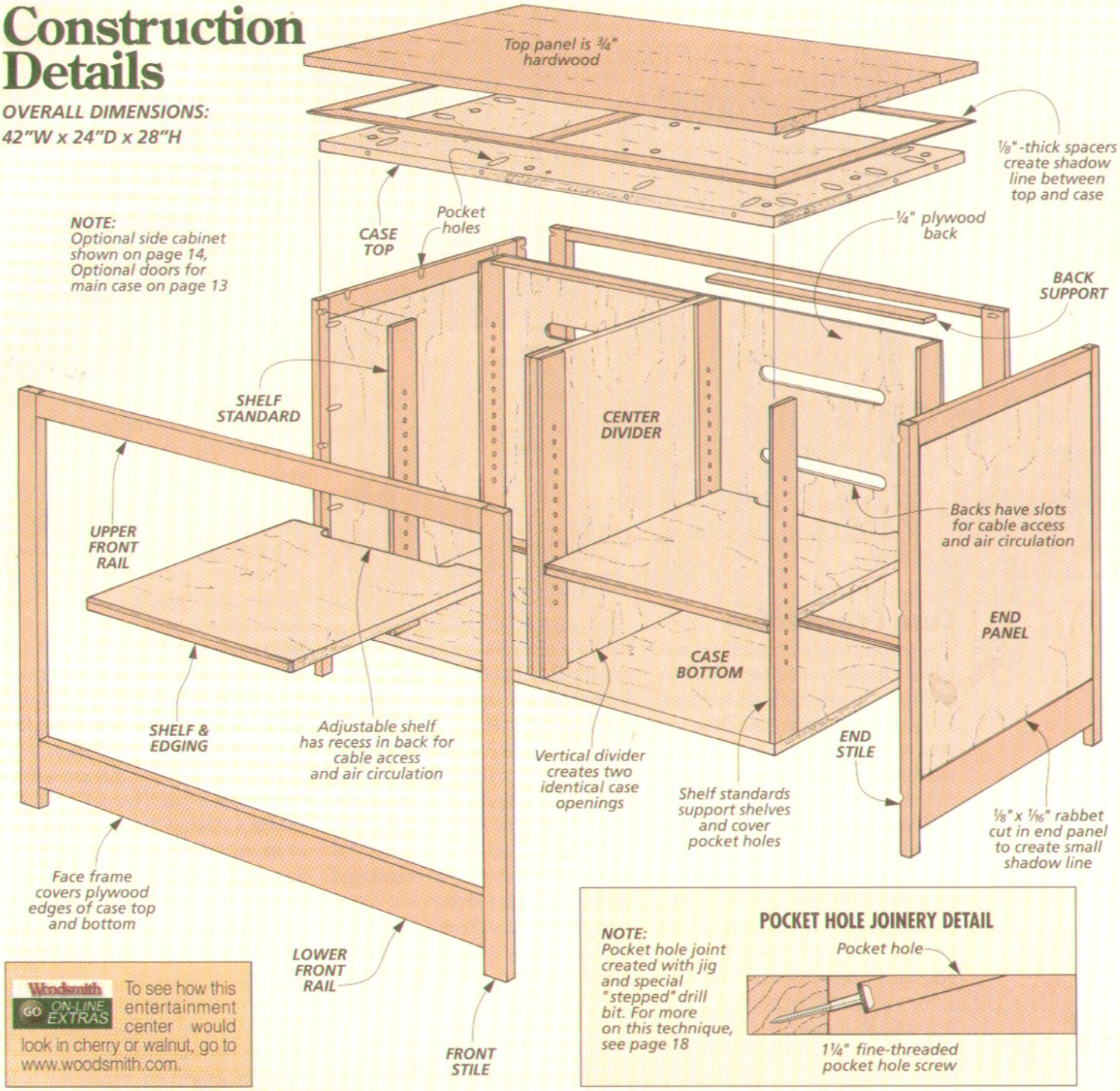

NOTE:
Optional side cabinet shown on page 14, Optional doors for main case on page 13

Woodsmith GO ON-LINE EXTRAS To see how this entertainment center would look in cherry or walnut, go to www.woodsmith.com.

POCKET HOLE JOINERY DETAIL

NOTE:
Pocket hole joint created with jig and special "stepped" drill bit. For more on this technique, see page 18

MATERIALS & SUPPLIES

A	End Panels (2)	¾ ply. - 20½ x 21⅛	**L**	Lower Back Rail (1)	¾ x 6 - 38½
B	Upr. End Rails (2)	¾ x 1½ - 20½	**M**	Shelf Standards (8)	⅜ x 2½ - 21⅞
C	Lwr. End Rails (2)	¾ x 3 - 20½	**N**	Back Supports (4)	⅜ x 1½ - 19⅛
D	End Stiles (4)	¾ x 1 - 27⅛	**O**	Back Panels (2)	¼ ply. - 20¼ x 21⅞
E	Case Top/Btm. (2)	¾ ply. - 22½ x 40½	**P**	Shelves (4)	¾ ply. - 19 x 19
F	Center Divider (1)	¾ ply. - 19¼ x 21⅞	**Q**	Shelf Edging (4)	¾ x ¼ -19
G	Divider Edging (1)	¾ x ¼ - 21⅞	**R**	Top Spacers	⅛ x 1½ - 180 rgh.
H	Front/Back Stiles (4)	¾ x 1¾ - 27⅛	**S**	Top Panel (1)	¾ x 24 - 42
I	Upper Front Rail (1)	¾ x 1½ - 38½	**T**	Door Stiles (4)*	¾ x 2 - 21
J	Lower Front Rail (1)	¾ x 3 - 38½	**U**	Door Rails (4)*	¾ x 2 - 15 15/16
K	Upper Back Rail (1)	¾ x ¾ - 38½	**V**	Glass Stop*	¼ x ¼ - 140 rgh.

- (1 pkg.) #8 x 1¼" Pocket Hole Screws
- (6) #8 x 2" Fh Woodscrews
- (16) Spoon-Style Shelf Supports
- (9) #8 x 1¼" Rh Woodscrews
- (9) #8 Flat Washers
- (2) ⅛" Glass (15⅞" x 17 11/16")*
- (1 pkg.) ½"-long Brads*
- (2 pr.) 2" x 1 9/16" Nickel Hinges*
- (2) 96mm Stainless-Steel Pulls*
- (2) Magnetic Catches & Strikes*

* Required for the optional doors

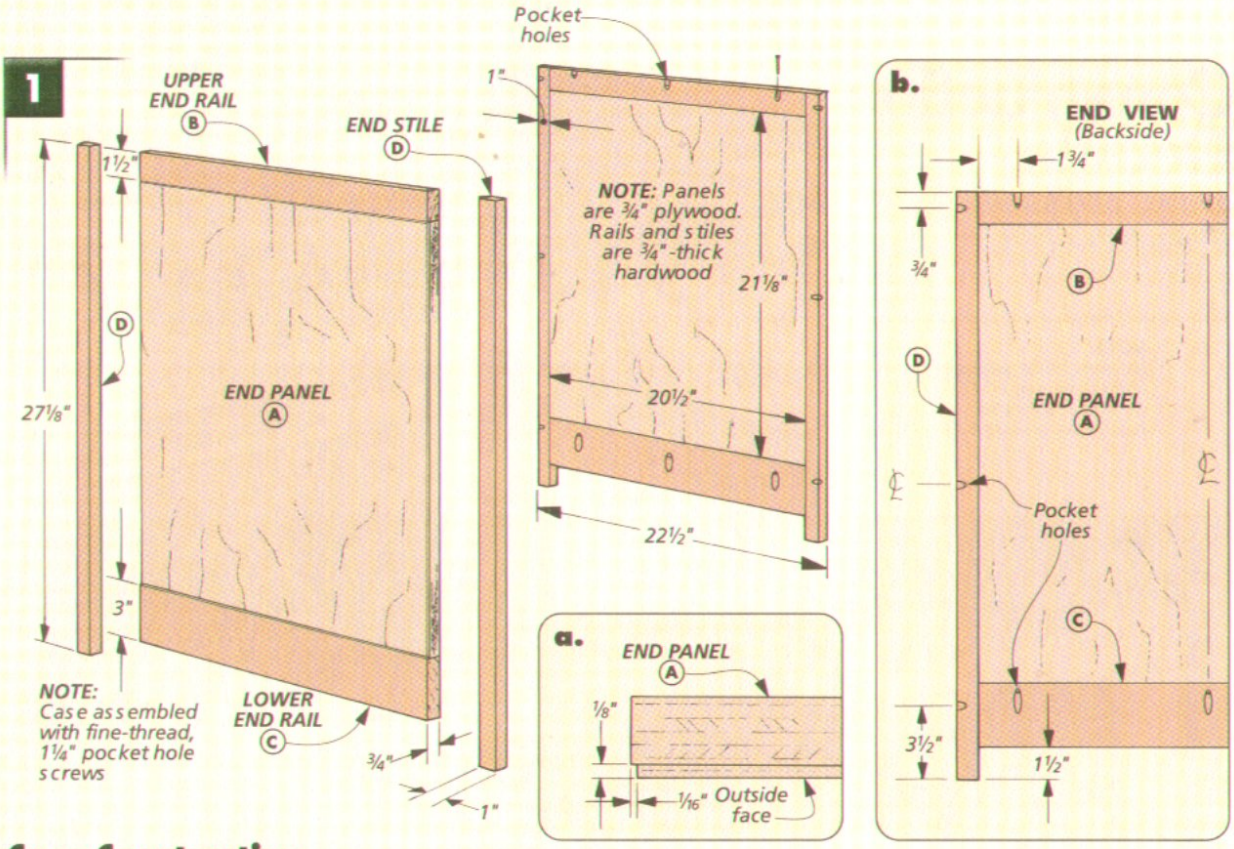

A small rabbet is all it takes to add an interesting shadow line to a frame and panel assembly.

Case Construction

The parts of this entertainment center are fairly typical for case construction. At each end there are frame and panel assemblies, and these are connected with top and bottom panels. Then to create the two openings, a vertical center divider will be added.

What's unique here is that almost the entire case is built using a pocket hole jig and screws. The nice thing is that all the pieces are butt jointed together, so there aren't any dadoes, grooves, or other joints to cut. On the other hand, I found that this lack of traditional joinery meant that I needed a few "helpers" when it was time to assemble the case. But more on that later.

END PANELS. As with many cases, the first thing to work on are the end assemblies (Fig. 1). But with pocket screws the sequence is a bit different. Instead of starting with the frames, I cut the ¾" plywood *end panels (A)* to size first.

When frame and panel pieces are the same thickness (as they will be here), it's pretty tough to get them flush all the way around the panel. I sidestepped the problem by creating a shadow line that accents the panel and hides the joint lines, as shown in the margin photo at left. This is easy to do — just cut a tiny rabbet around each panel (Fig. 1a).

RAILS & STILES. With the rabbets cut on the panels, the rails and stiles can be added to create the frame around the panel (Fig. 1). I started with the *upper (B)* and *lower end rails (C)* since they're cut to length to match the width of this panel.

When attaching the rails to the panels, the pocket holes could have been drilled in either the panels or the rails. As you can see in Fig. 1, I drilled them in the rails. This meant that the holes in the upper rails were drilled partially into their edges, but this method is better because these holes will end up neatly hidden by the top and bottom panels later on.

I should also note two things here before going on. One is that while in most situations the locations of the pocket holes aren't critical, I've included them here because there are so many screws used to build this project (Fig. 1b). This way, you'll be sure to avoid drilling into a neighboring pocket hole (or screw).

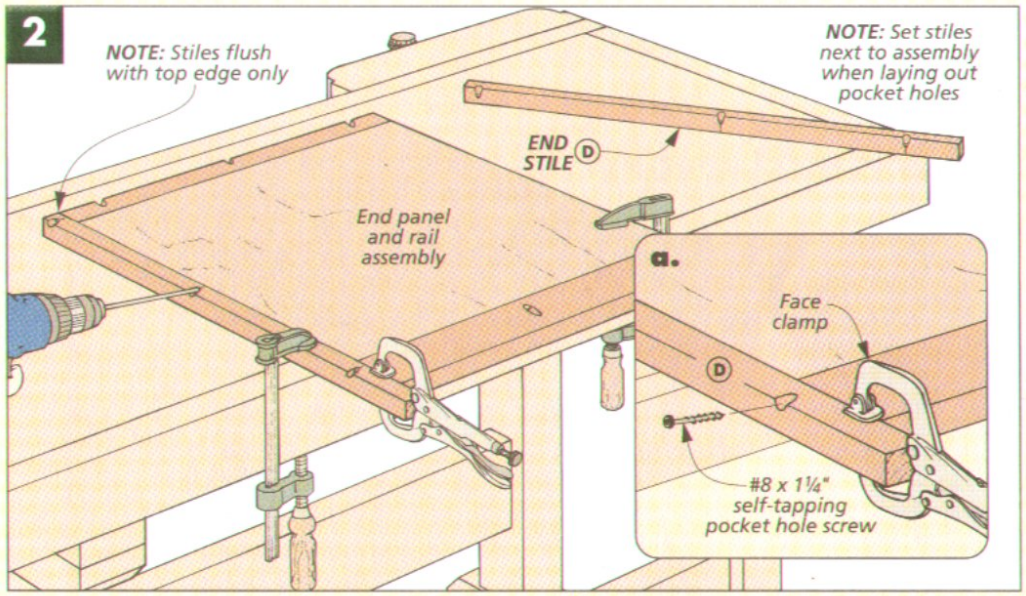

The other thing to note has to do with the use of glue. Technically, the screws should provide plenty of holding power. But to play it safe, it would be a good idea to apply glue too. However, you'll want to use the glue sparingly so you don't have a lot of excess to clean up.

To complete the frames, the two *end stiles (D)* are ready to be added (Fig. 2). These pieces are sized to extend below the lower rail to create short legs. It sounds simple enough, but with the stiles offset, they're not identical — the pieces are actually mirrored images of each other. So to drill the pocket holes in the right place, it's best to lay the stiles next to the assembly and mark the edges that you'll be drilling into.

TOP & BOTTOM. Now that the end assemblies are complete, they can be connected with the *case top* and *bottom (E)*, as shown Figs. 3 and 4. These 3/4" plywood panels are identical, and once they've been cut to size, they're ready to be screwed to the end assemblies.

I started with the case top. After drilling the pocket holes in each end of the panel, it's screwed flush with the top edges of the end assemblies. But holding this long panel square to the ends while you're driving in the screws takes more than two hands. So I made a couple L-shaped braces to help hold the assembly square while it was being screwed together, as shown in Fig. 3. (Here, it's okay to screw into the top face of the panel — it'll get covered with a hardwood top panel later.)

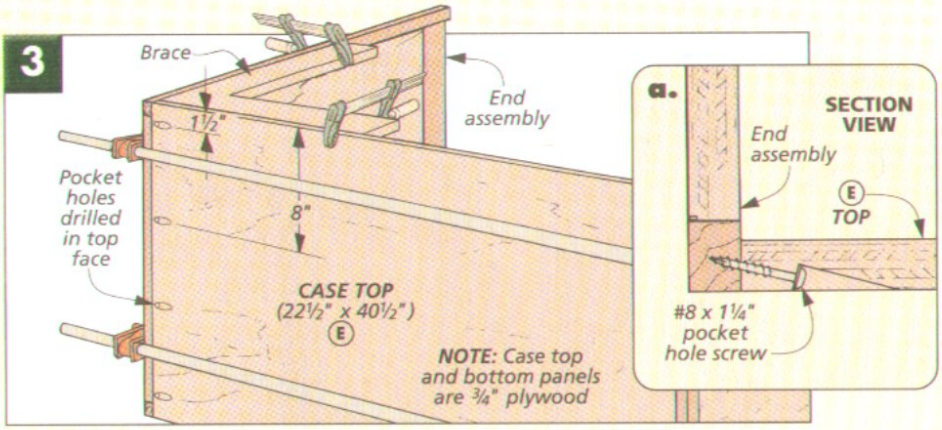

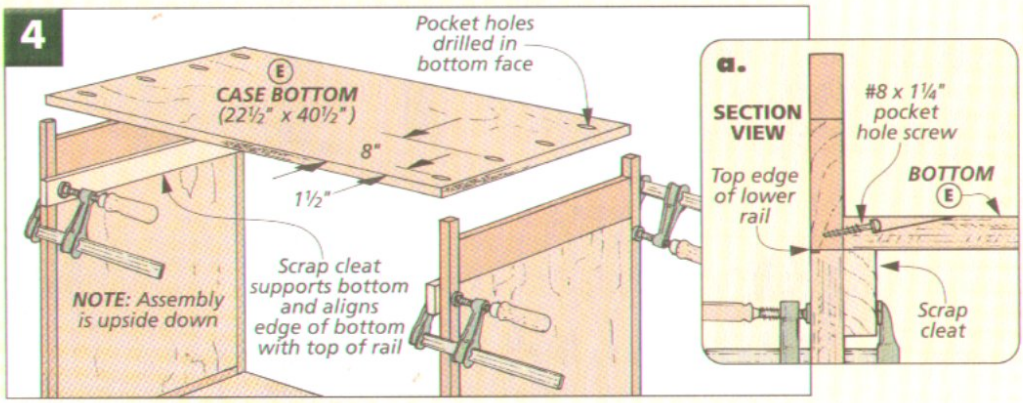

When attaching the case bottom, you'll need to flip the assembly over, as shown in Fig. 4. The idea here is to position the upper face of this panel even with the top edge of the lower end rail, as indicated in Fig. 4a. There's nothing tricky about this. All you need to do is clamp a scrap cleat across each end and let the cleat support the panel while you screw it in place.

DIVIDER. To divide the case into two equal openings, the next piece to make is the *center divider (F)*. When cutting this panel to size, note that it won't end up as deep (wide) as the top and bottom panels. As you can see in Fig. 5a, it is flush with the front of the case and stops a few inches short in back. (This space will be used to create a little trough or pocket for the cables.)

Before the plywood divider can be screwed into the case, it needs a piece of *edging (G)* to cover the plies in the front. I made this thin strip quickly and safely by ripping a 1/4"-wide strip from an oversized piece of 3/4"-thick hardwood.

The center divider is the only case piece that isn't attached with pocket hole screws. Instead, it's simply screwed to the top and bottom panels, flush with the front edges (Fig. 5a). But this panel isn't much easier to hold in place than the top and bottom panels were, so you may want to clamp some cleats to the case for support — similar to what you did with the bottom panel.

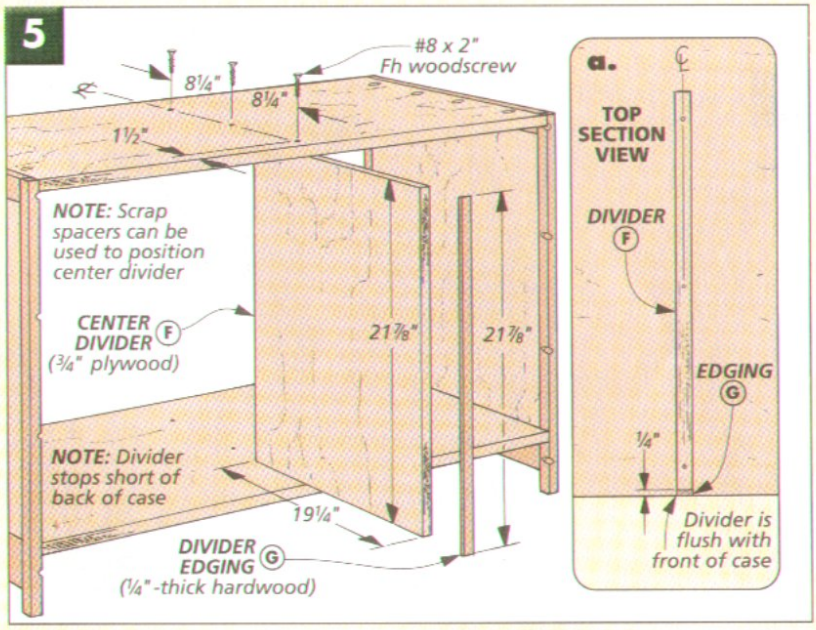

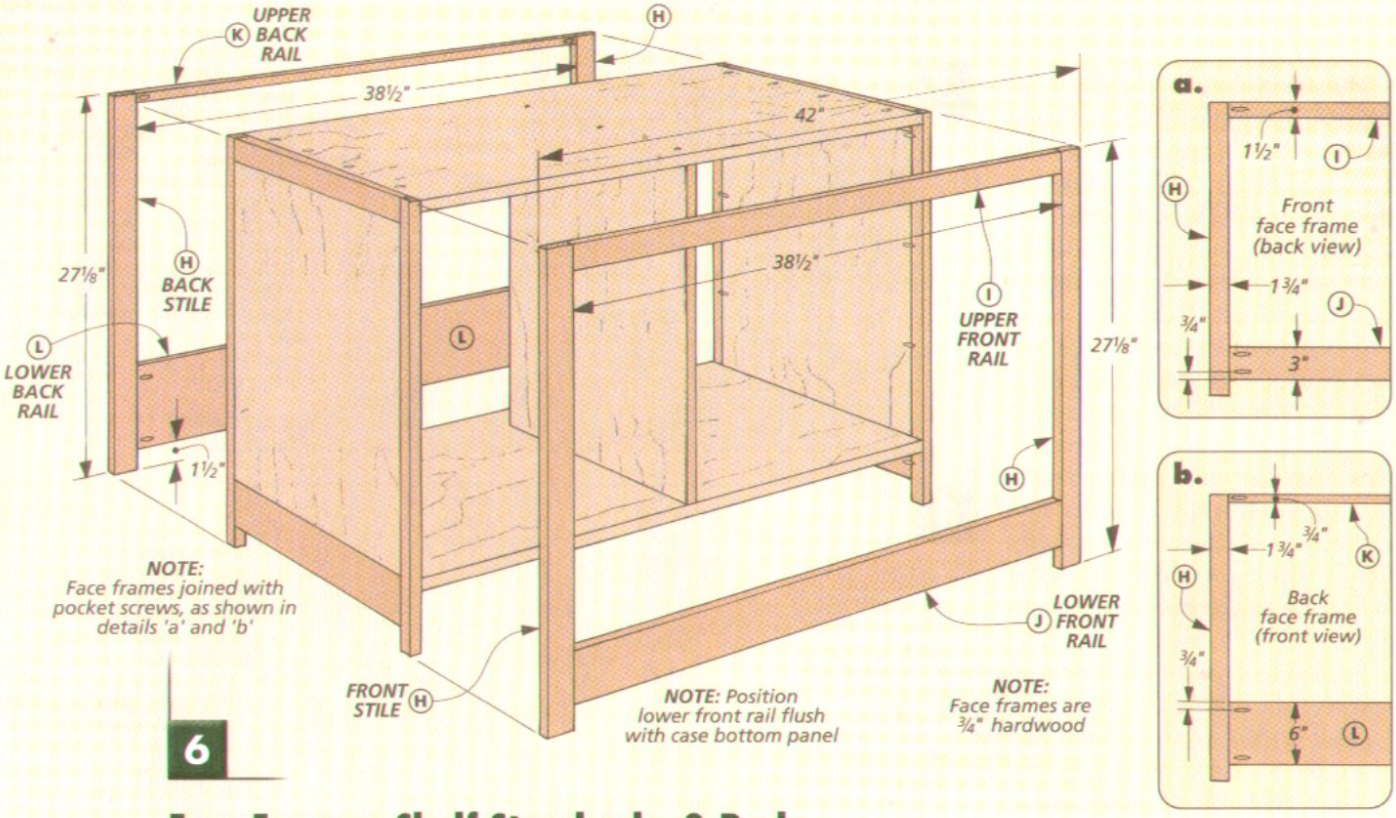

6

Face Frames, Shelf Standards, & Backs

Now that the main case has been assembled, it's time to add a pair of face frames, some shelf standards, and a couple of back panels.

FACE FRAMES. I started with the face frames that cover the plywood edges of the case at the front and back (Fig. 6). Typically, I'd just add a face frame to the front of a case. But the back frame here will create a shallow trough or pocket for the cables.

These two face frames aren't identical though. While the *stiles (H)* are the same, the *lower back rail (L)* is wider than the *lower front rail (J)*. And to allow the back panels to fit through the opening later on, the *upper back rail (K)* is narrower than the *upper front rail (I)*.

Once the face frame pieces are cut to size, they're simply screwed together. This is where pocket hole joinery really shines. These frames are quick and easy to assemble. The only thing to give extra attention to is the position of the lower front rail. You want it to end up flush with the top face of the case bottom. So I set each stile against the case and marked the position of the bottom panel. These marks can then be used to position the lower front rail.

When the face frames are assembled, they're ready to be screwed to the case (Fig. 7). Don't worry if the frames and case don't end up perfectly flush all the way around. You can always do a little trimming later, as shown in the box at left.

SHELF STANDARDS. With the face frames in place, you can make the *shelf standards (M)* next (Fig. 8). These ⅜"-thick pieces have a series

FLUSH FACE FRAMES

When gluing a face frame to a large case, it's nearly impossible to get the edges completely flush. So I usually plan to do a little "touch-up." Most times, I'll use my block plane, setting it to take very fine shavings, see drawing. Or if there's a only slight shoulder, I'll sand it flush, using a sanding block to prevent rounding the edges.

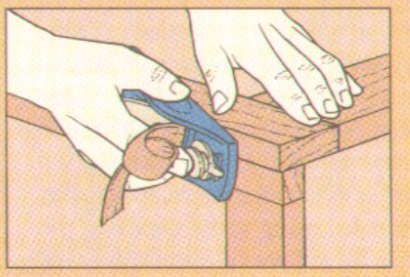

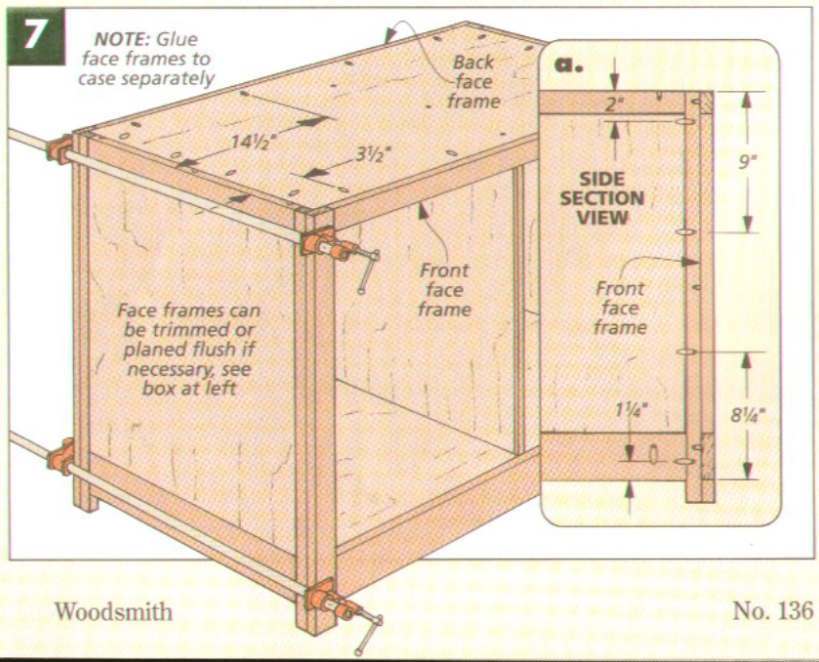

7

of holes for holding spoon-style shelf pins. But they do more than just support the shelves. These standards also cover the most visible pocket holes inside the case.

The shelf standards at the front of the case can simply be glued and clamped to the sides and center divider. The standards glued flush with the back of the center divider are also easy enough to install.

The trick is the back standards at the ends — they also need to align with the back of the divider. This is easy to do with a couple of scrap spacers. But then they're inset too far for clamps to reach them. So to hold them, I cut some thin, flexible strips and wedged them between the standards while the glue dried, as you can see in Fig. 9.

BACK SUPPORTS. While the glue on the standards was drying, I cut four 3/8"-thick *back supports (N)* to fit between the standards at the top and bottom of the case (Fig. 8). And since they're flush with the back edges of the standards, I used the same spacers and flexible strips when gluing them in place.

BACK PANELS. At this point, the 1/4" plywood *back panels (O)* can be cut to finished size to fit inside the case, as shown in Fig. 10. But before gluing these panels in place, I cut three access slots across the back of each (Fig. 10a). This will make it easier to feed the cables through when connecting the components, as well as let the air circulate freely. To make these slots, I first drilled a 1"-dia. hole at each end. Then the waste between the holes can be removed with a sabre saw, and the slots can be sanded smooth.

The back panels have to be angled to be slid in front of the back face frame (which is why there are two back panels in the first place). And the back face frame also prevents you from being able to nail the panels in place. But a few scrap spacers will apply enough pressure to hold them while the glue dries (Fig. 10b).

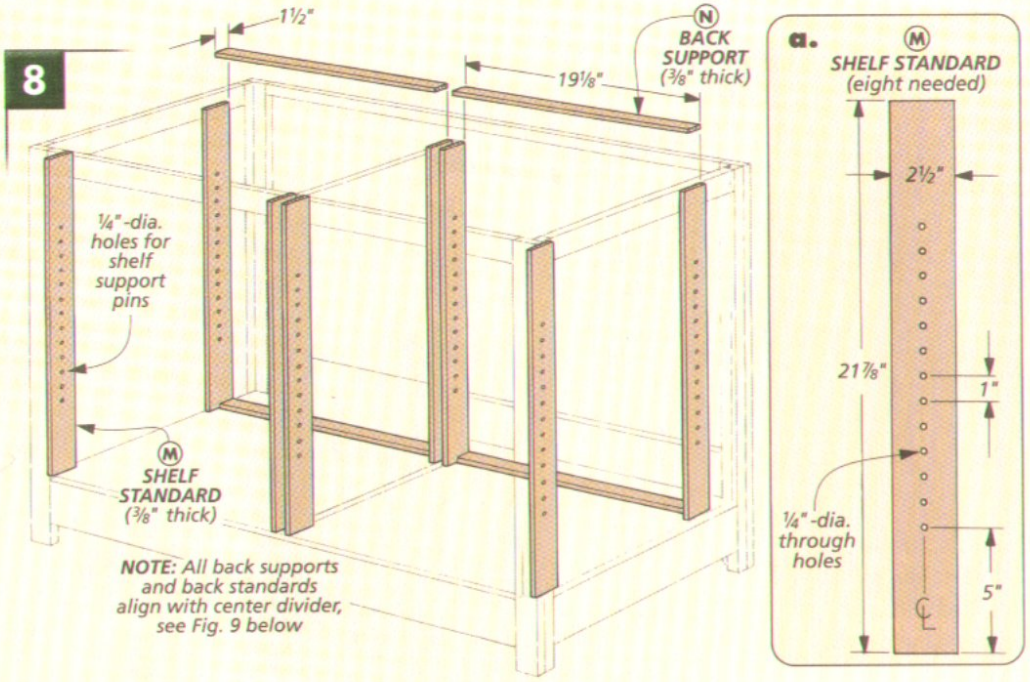

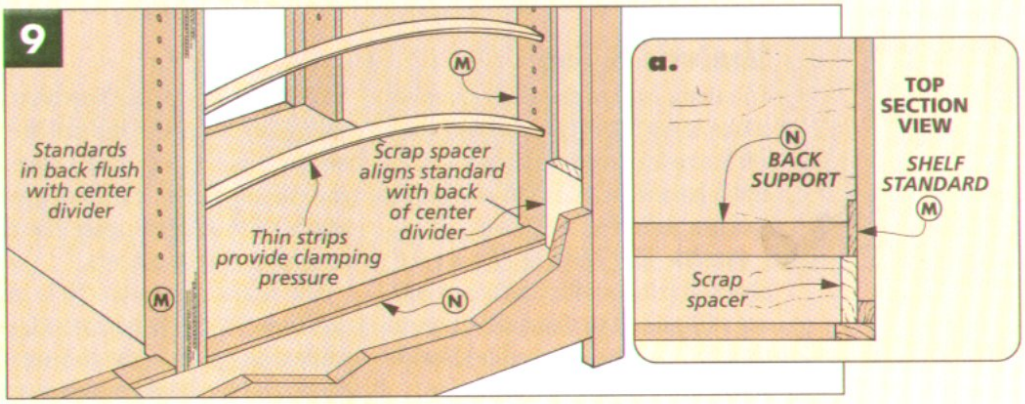

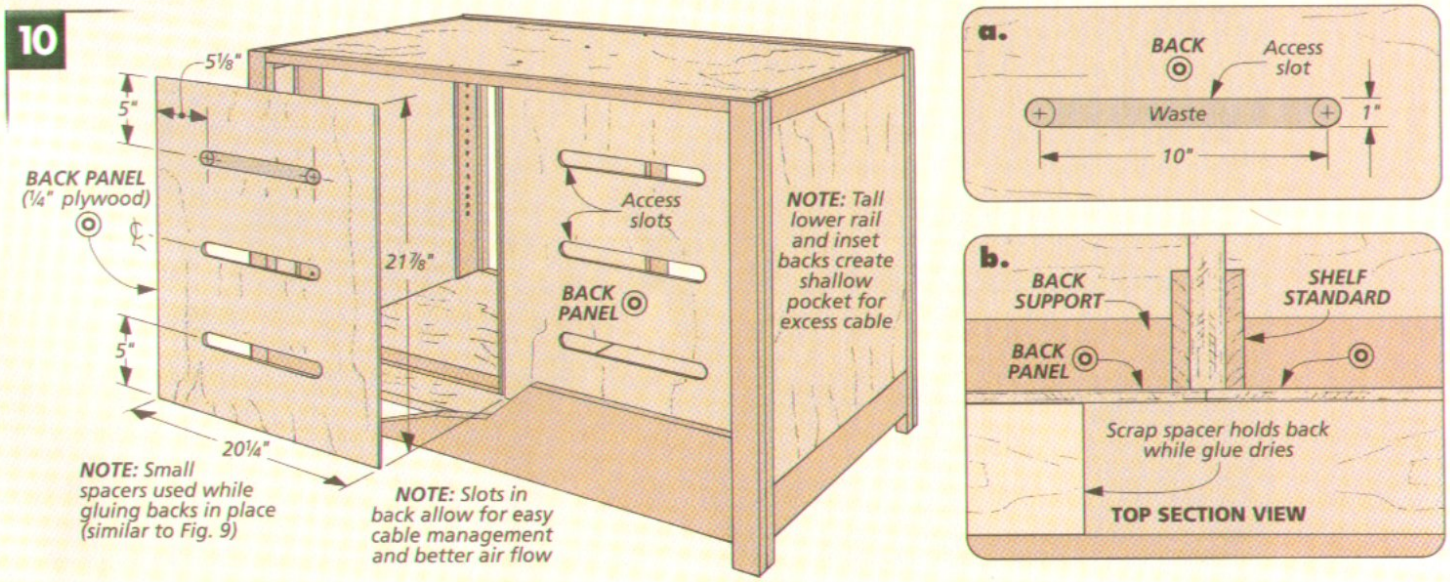

▲ *The decorative shadow line on the end assemblies is repeated under the top panel. This time, it's created with thin spacers.*

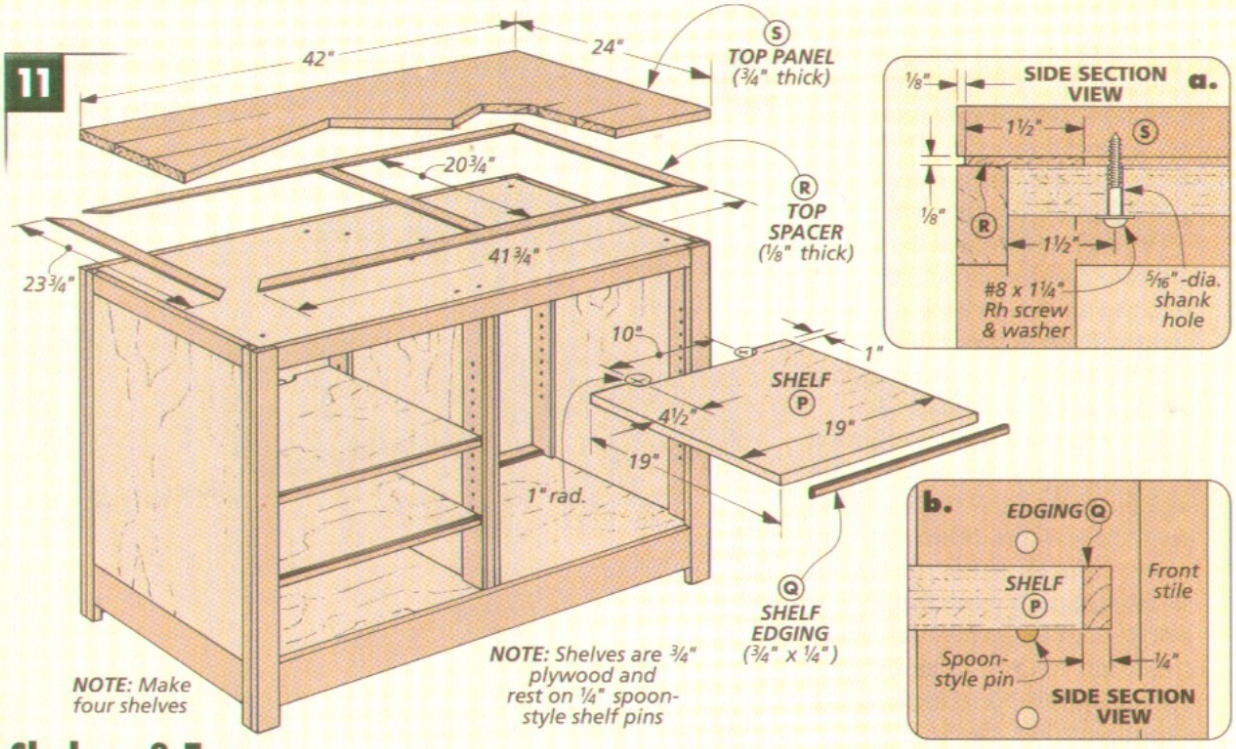

Shelves & Top

The main case of the entertainment center is just about complete. All that's left is to add some adjustable shelves and a hardwood top with some thin spacers, as in Fig. 11 above.

SHELVES. The *shelves (P)* are ¾" plywood panels with hardwood *edging (Q)* added to the front of each. (For the edging, I ripped a ¼"-wide strip from ¾"-thick hardwood.)

Then to make it easier to organize the cables (and let the air circulate), I used my sabre saw to create a cutout on the back of each shelf and sanded this profile smooth.

TOP PANEL & SPACERS. Now that the shelves are in place, the last area to work on is the top of the case. As you can see in Fig. 11, there are two layers here: A large panel that rests on a layer of thin spacers.

The actual *top panel (S)* is glued up from ¾"-thick hardwood. And while the glue is drying on this panel, you can begin working on the second layer that's sandwiched between the top and the case (Fig. 11). It's a thin "frame" of *top spacers (R)* cut from stock that's been resawn or planed down to ⅛" thick.

The spacers are mitered to length so they set ⅛" back from the edges of the case, as shown in Fig. 11a. This creates a thin shadow line similar to the one on the end panels of the case. (See margin photo at left.) Also to help support the top panel, I added a spacer at the center.

When the glue is dry, the case top can be cut to match the case and then screwed in place. I made the shank holes oversized so the top can expand and contract freely. (To find out how I finished the entertainment center, turn to page 17.) W

CUTTING DIAGRAM

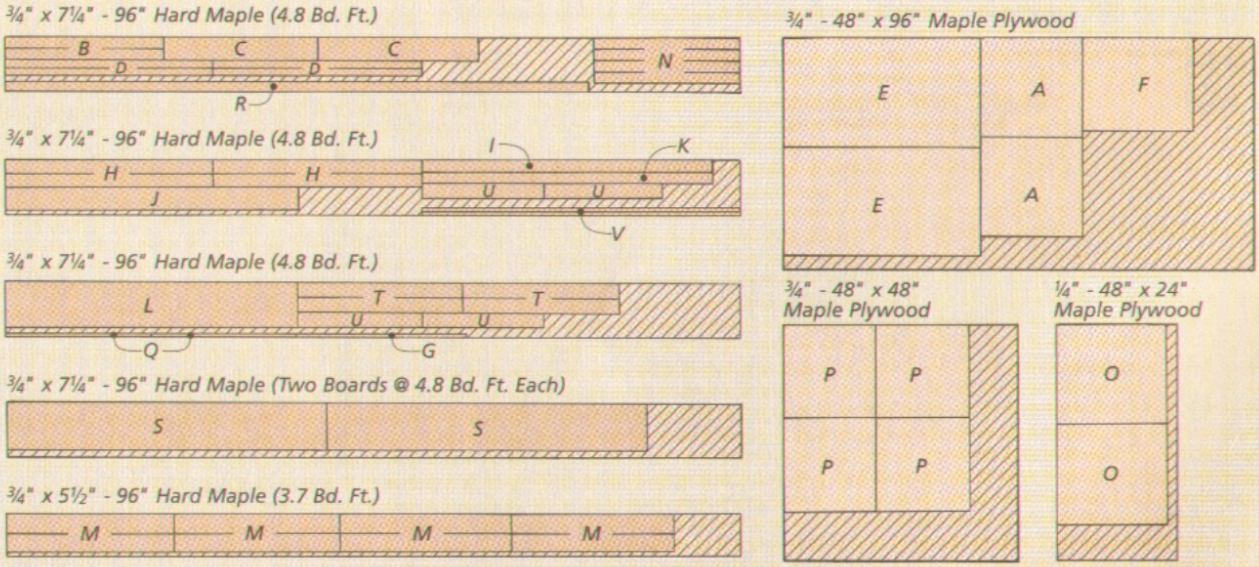

NOTE: *Top spacers (R) and glass stop (V) must be resawn to get blanks needed.*

Optional Doors

If you'd like to build a pair of inset doors for this entertainment center, you'll find they're just simple frames with glass panels, as shown in Fig. 1.

Like the face frames on the case, these doors could've been built quickly with pocket hole joinery. Plus, you can buy hardwood plugs for making the pocket holes less visible. (For sources, see page 35.)

FRAME. But I didn't want the joinery to be visible at all, so I built the door frames with stub tenons and grooves (Figs. 1 and 1a). And when sizing the *door stiles (T)* and *rails (U)*, I allowed for a 1/16" gap around the two doors, but no gap between them. (This makes the math a bit easier, and the edges of the center stiles will be trimmed later to quickly create an even 1/16" gap.)

With the stiles and rails cut to size, 3/8"-deep grooves need to be cut on the inside edges of the pieces (Fig. 1a). Then you can cut the stub tenons to fit into these grooves.

After the frames have been assembled, they're ready for the rabbet that will hold the glass (Fig. 1c). With the grooves already cut, there's not much material left to be removed, so the rabbet can be routed in a single pass (Fig. 2). But you'll still need to square up the corners with a chisel.

HINGE MORTISES. I planned to mount the doors on butt hinges. And to make installation easier, I cut the mortises in the door frames only, as indicated in Fig. 3a. (The hinges will be surface mounted to the case.) To do this, I used my table saw, attaching a tall auxiliary fence to the miter gauge to support the frame (Fig. 3).

GLASS. At this point, the doors are ready for the 1/8" glass panels. Quarter-round *glass stop (V)* will hold the glass in place. (When making these tiny strips, it's best to start with oversized pieces to be safe.) Then they're mitered to length and nailed to the frame (Fig. 1c).

MOUNT DOORS. Now the doors are ready to be mounted to the case. With inset doors, the goal is to get an even gap around and between the doors. I like to concentrate on the gaps around the doors first. Then creating the gap between the doors is a simple matter of planing or sanding a little off each center stile.

HARDWARE. When the doors fit well, the last step is to add pulls to the doors and magnetic catches to the inside of the case (Figs. 1b and 4).

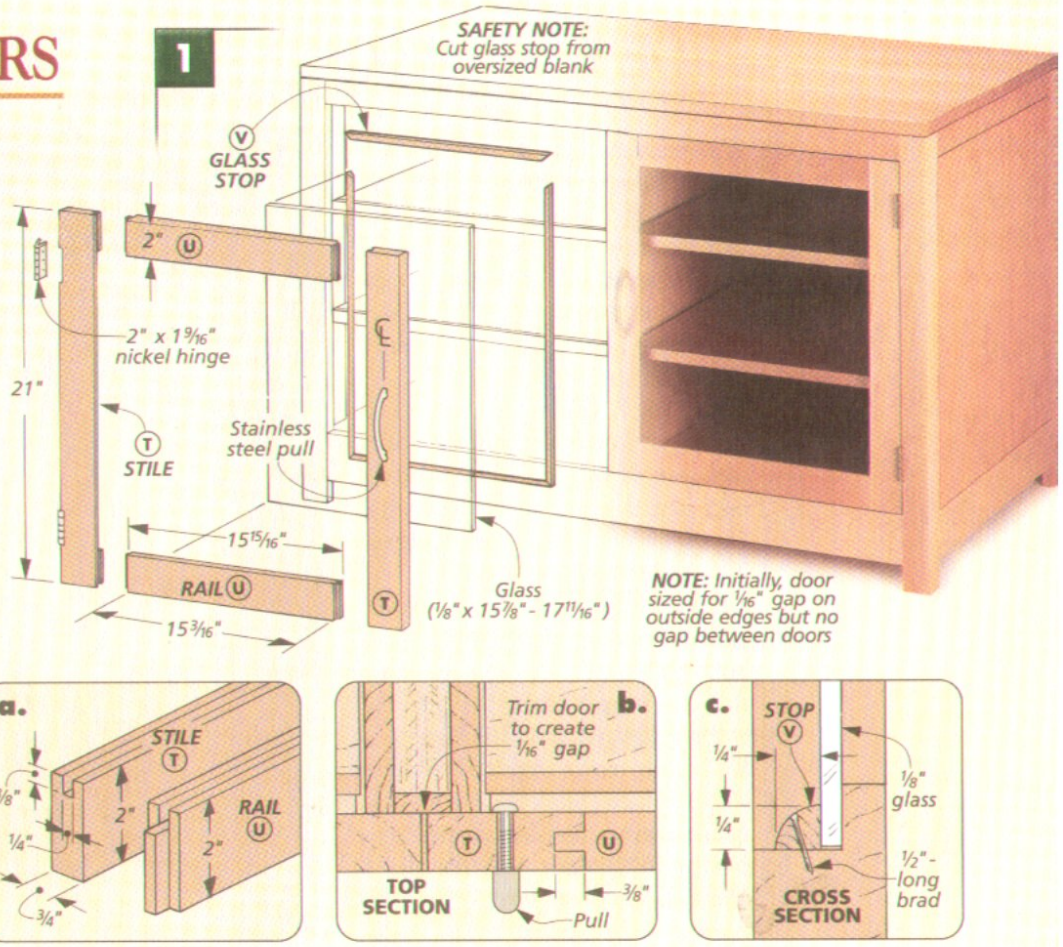

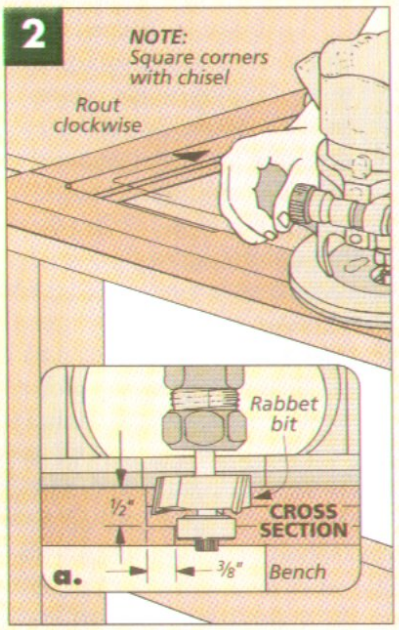

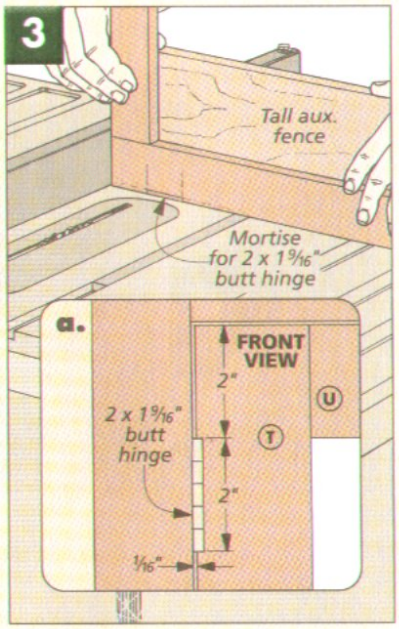

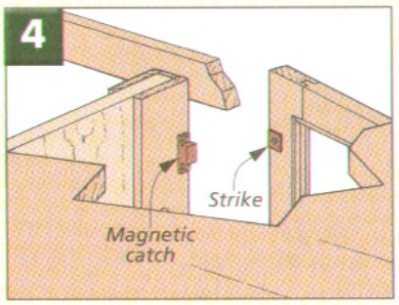

SIDE CABINET

This side cabinet is the perfect "sidekick" to the entertainment center on page 6. Since its top panel is flush with the sides, the cabinet will nestle up tight on either side of the TV cabinet. And the small drawer and adjustable shelf offer quite a bit of additional space for storage.

But don't limit this cabinet to being just a component of the entertainment center. When set next to a bed or arm chair, as shown in the photos below, it also makes a great little nightstand or end table.

CONSTRUCTION NOTES. As you might expect, building this cabinet is similar to building the TV cabinet — only this one is even easier because the workpieces are smaller. However, there are some important differences to note. Instead of a vertical center divider, the side cabinet has a horizontal divider that creates a small drawer opening. Plus, the back is quite a bit different. It still has a face frame, but there's no plywood back to the cabinet and no pocket for excess cables.

END ASSEMBLIES. This small cabinet starts out just like the larger TV unit: by building two end assemblies, as shown in Fig. 1. First, the *end panel (A)* is cut to size, and the small rabbet that creates the shadow line is cut, refer to Figs. 1 and 1a on page 8.

Next, the *upper (B)* and *lower end rails (C)* are attached to the panel with pocket hole screws. Again, I drilled the stepped holes for the screws in the rails (instead of the panel) so they'd end up being hidden later. Then the two *stiles (D)* can be cut to size and attached to the assembly. And as on the larger case before, you want to get these pocket holes in the right places, so when laying them out, it's best to set the stiles next to the assembly.

Nightstand or end table. *This side cabinet doesn't have to be set next to the TV cabinet. It's the perfect size for a nightstand (left). And since the back looks as good as the front, it can be set out away from the wall as an end table (right).*

CONNECTING PANELS. With the stiles in place, the two end assemblies are complete and can be connected with the 3/4" plywood *top (E)* and *bottom (E)* panels (Fig. 1). Here's where the big difference between the two cabinets begins. Instead of a vertical center divider, these side cabinets have a horizontal *divider (E)* that will support the drawer.

The divider is identical to the top and bottom panels except for one thing. I drilled 3/4"-dia. access holes in each corner so I'd be able to screw the hardwood top panel to the case later on (Figs. 1b and 4a). And while I was at it, I drilled the oversized shank holes (5/16") in the top (E). (They're oversized so the hardwood top will be able to expand and contract with changes in humidity.)

When connecting the end assemblies with the plywood panels, I started with the top and bottom pieces. To do this, I used braces and cleats just as I did before with TV cabinet, refer to Figs. 3 and 4 on page 9.

Attaching the divider is similar to the bottom panel. It's positioned by

a couple of cleats, but these scrap pieces can be cut to match the height of the opening between the top and divider ($4\frac{1}{4}$"), as shown in Fig. 2. Then with the case flipped upside down, the divider and cleats simply rest on the top panel.

FACE FRAMES. Now the front and back face frames ready to be added to the case, as shown in Fig. 3. The front face frame establishes the opening for the drawer, while the one in back merely cleans up the back side so you'll be able to set the cabinet out away from a wall.

When cutting the face frame pieces to size, the four *front* and *back stiles (F)* are identical, as well as the *lower rails (I)*. There are two narrow *upper front rails (G)* that create the drawer opening. And as for the *upper back rail (H)*, it's $6\frac{1}{2}$" wide and covers the entire back of the drawer opening.

Assembling the face frames here isn't much different than those made for the TV cabinet. Both lower rails should end up flush with the bottom panel, as shown in Fig. 3a. And there's the extra upper front rail that should also be flush with the divider. In both cases, you can set the stiles against the case and mark the location of the plywood panels.

TOP PANEL & SPACERS. After the face frames had been pocket-screwed to the front and back of the case, the next area I worked on was the top of the cabinet. Like the TV cabinet, there are two layers here, as you can see in Fig. 4.

First, I glued up an oversized $\frac{3}{4}$"-thick hardwood *top panel (K)*. Then while the glue was drying, I worked on the *top spacers (J)*. Again, these create the shadow line under the top panel, so you'll need to plane or resaw some stock down to $\frac{1}{8}$" thick for these pieces. Then they're simply mitered to length so they set back $\frac{1}{8}$" from the outside edge of the cabinet.

After the top spacers have been glued in place, the top panel can be cut to finished size and then screwed down to the cabinet. (You'll need a long screwdriver to be able to tighten the woodscrews.)

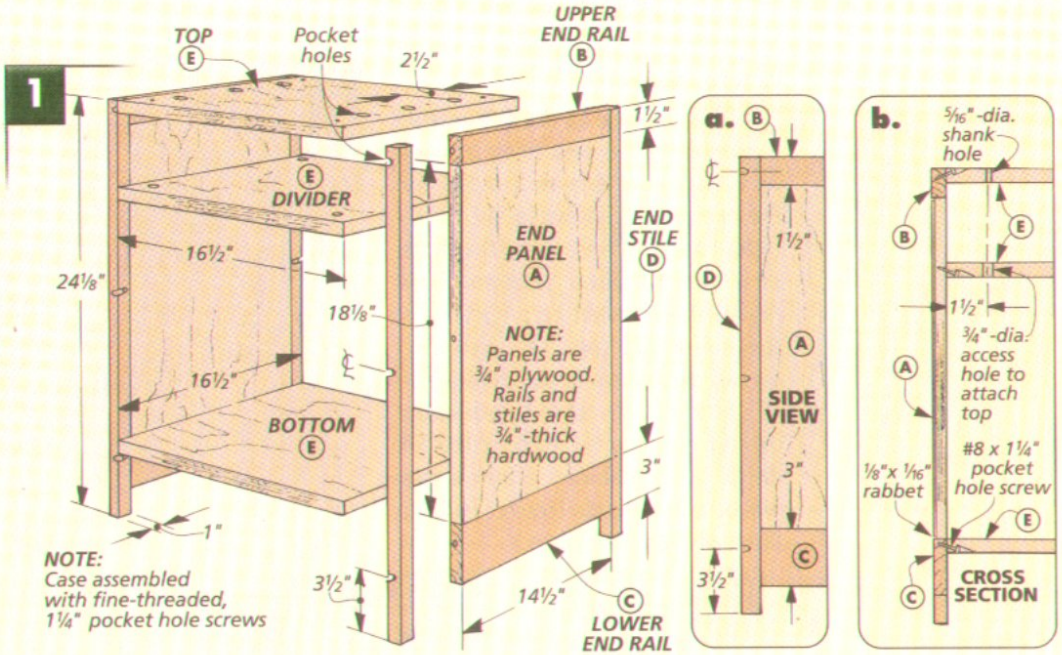

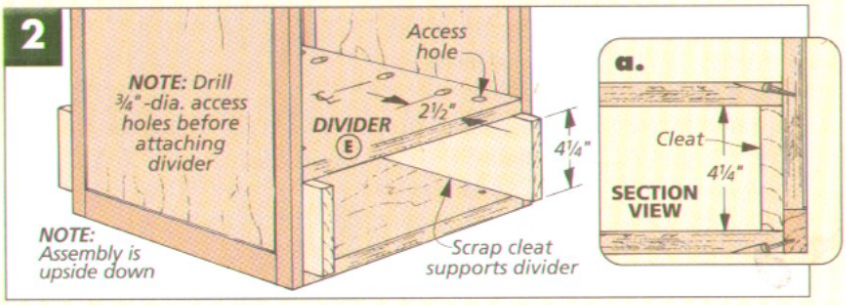

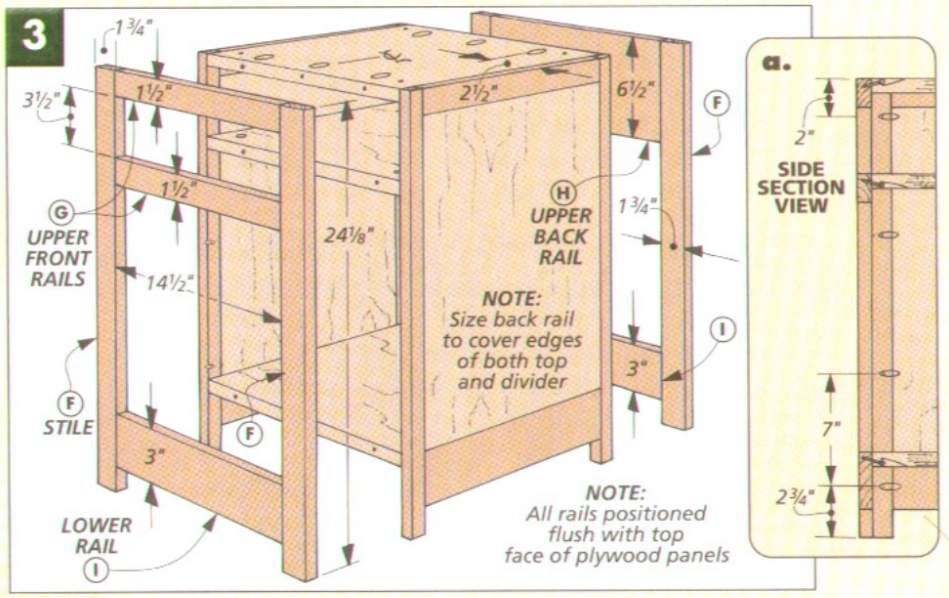

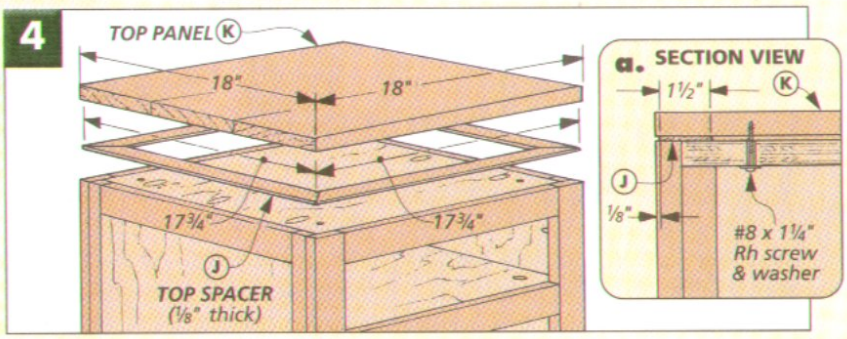

Drawer

Now that the case for the side cabinet is complete, the next thing to work on is the small drawer that fits into the opening, as shown in Fig. 5.

CUT TO SIZE. When sizing the drawer pieces, I cut the *front* and *back (L)* so there would be a 1/16" gap at the sides and top. The *side (M)* pieces are resawn or planed down to 1/2" thick and are cut to length so the drawer ends up 1/2" short of the full depth of the cabinet. (Later a stop will be added so the drawer ends up flush with the front face.)

LOCKING RABBET JOINT. To join the drawer pieces, I used a fairly simple locking rabbet joint, as described in the box below. However, if you own a router and a dovetail jig, the pieces are sized so that you could join them with half-blind dovetails.

BOTTOM. Before assembling the drawer pieces, you'll want to cut a groove near the bottom of each piece to hold a 1/4" plywood *drawer bottom (N)*, as shown in Fig. 5a. Once the bottom is cut to size, the drawer can be glued together, and the pull can be added to the front.

GUIDES, KICKER, & STOP. To guide the drawer in and out of the opening, there are a few more pieces to add. First, I glued *drawer guides (O)* along the sides of the cabinet. These

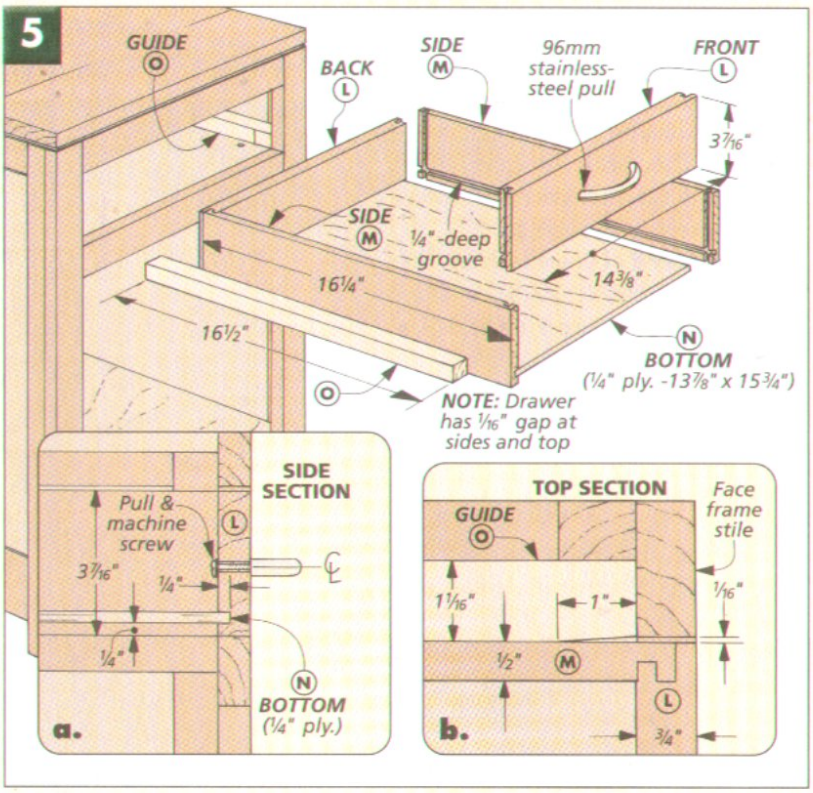

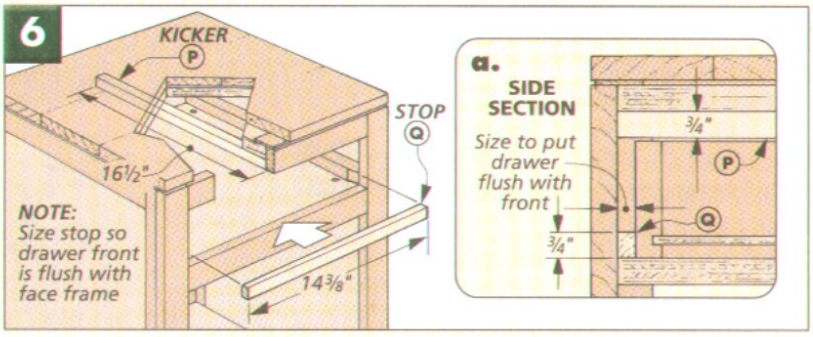

HOW TO MAKE LOCKING RABBETS

To build the drawers on the small cabinet, I used a locking rabbet joint, see photo. It's much stronger than a simple butt or rabbet joint, and it's not as difficult as cutting dovetails.

With a locking rabbet, a short tongue is cut on the front and back pieces, as in Steps 1 and 2. Then these tongues simply lock into dadoes cut in each side piece, see Step 3.

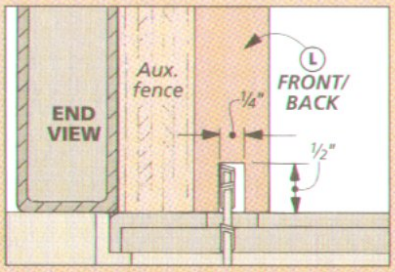

1 *On the front and back pieces, cut a 1/4"-wide slot on each end. Raise the blade so the depth matches the thickness of the drawer sides (1/2").*

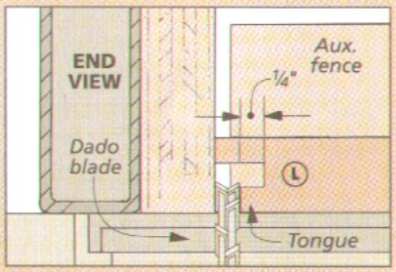

2 *Next create a short tongue on the inside face of each front and back piece. Sneak up on the fence setting until the tongue is 1/4" long.*

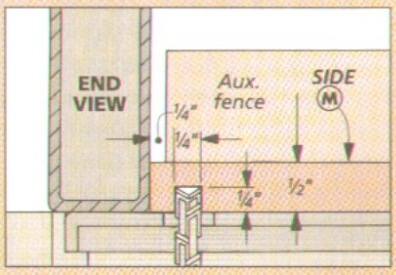

3 *Finally to hold the tongue on the front and back pieces, cut 1/4" x 1/4" dadoes at the ends of each side piece. (Check the setup with a test piece.)*

are sized to stick past the face frame stiles 1/16", as shown in Fig. 5b. (To make it easier to "feed" the drawer into the cabinet, I tapered the front 1" of each guide with sandpaper.)

Next, to keep the drawer from tipping as it's pulled out, I glued a *kicker (P)* under the top of the case (Fig. 6). Then I added a *stop (Q)* at the back of the case. You'll want to sneak up on the width of this piece so that when the drawer stops against it, the drawer's front face will be flush with the face frame.

SHELVES & STANDARDS. For this small cabinet, I saved the shelves for last (Fig. 7). To support these panels, four *shelf standards (R)* will need to be resawn or planed down to 3/8" thick. They're basically the same as the standards in the TV cabinet (just shorter), as shown in Fig. 7.

Finally, you can cut the *shelf (S)* to size from 3/4" plywood (Fig. 7). And since this cabinet is open in the back as well as the front, I glued hardwood *edging (T)* to both the front and back edges of the shelf. W

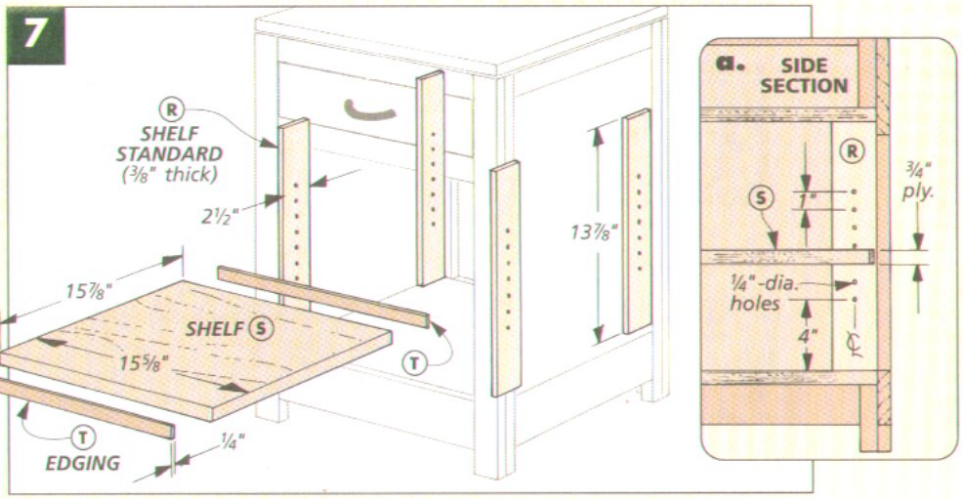

FINISHING TOUCH

When deciding on the finish for the entertainment center, I chose not to stain the wood. For one thing, the light color of maple fits well with the project's contemporary style. And besides, the color of the plywood and hardwood was a good match, and maple can be difficult to stain evenly anyway — it often ends up looking "blotchy."

Instead, I sanded the project to 180-grit and then applied several coats of a wipe-on polyurethane. However, this would also be a great project for trying your hand at a water-based topcoat.

MATERIALS & SUPPLIES

A	End Panels (2)	3/4 ply. - 14 1/2 x 18 1/8
B	Upper End Rails (2)	3/4 x 1 1/2 - 14 1/2
C	Lower End Rails (2)	3/4 x 3 - 14 1/2
D	End Stiles (4)	3/4 x 1 - 24 1/8
E	Top/Btm./Divider (3)	3/4 ply. - 16 1/2 x 16 1/2
F	Front/Back Stiles (4)	3/4 x 1 3/4 - 24 1/8
G	Upper Front Rails (2)	3/4 x 1 1/2 - 14 1/2
H	Upper Back Rail (1)	3/4 x 6 1/2 - 14 1/2
I	Front/Back Lower Rails (2)	3/4 x 3 - 14 1/2
J	Top Spacers (1)	1/8 x 1 1/2 - 90 rgh.
K	Top Panel (1)	3/4 x 18 - 18
L	Drawer Front/Back (2)	3/4 x 3 7/16 - 14 3/8
M	Drawer Sides (2)	1/2 x 3 7/16 - 16 1/4
N	Drawer Bottom (1)	1/4 ply. - 13 7/8 x 15 3/4
O	Drawer Guides (2)	3/4 x 1 1/16 - 16 1/2
P	Drawer Kicker (1)	3/4 x 3/4 - 16 1/2
Q	Drawer Stop (1)	3/4 x 1/2 - 14 3/8
R	Shelf Standards (4)	3/8 x 2 1/2 - 13 7/8
S	Shelf (1)	3/4 ply. - 15 7/8 x 15 5/8
T	Shelf Edging (2)	3/4 x 1/4 - 15 5/8

- (1 pkg.) 1 1/4" Pocket Hole Screws
- (4) #8 x 1 1/4" Rh Woodscrews
- (4) #8 Flat Washers
- (1) 96mm Stainless-Steel Pull
- (4) Spoon-Style Shelf Supports

CUTTING DIAGRAM

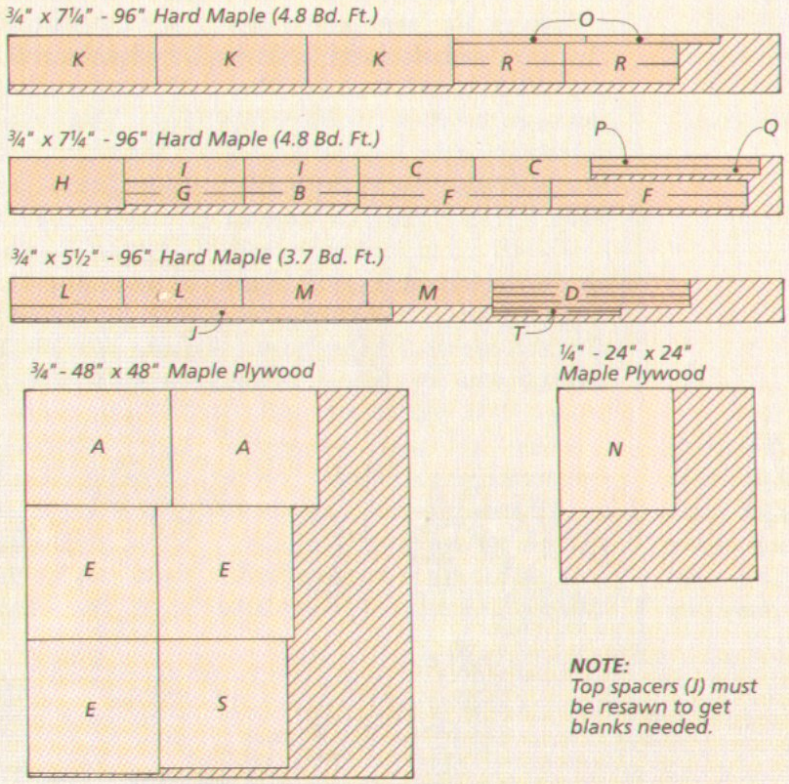

NOTE: *Top spacers (J) must be resawn to get blanks needed.*

POCKET HOLE JOINERY

Drill it, clamp it, and drive it — you'll be impressed at how quickly a pocket hole joint can pull everything together.

Pocket hole joinery. When it comes to woodworking techniques, it doesn't get much simpler than this — basically just butt joints that are screwed together. But the screws aren't sunk "straight" through the workpieces like they normally would be. Instead, they're set at a slight angle (15°). This means the screw enters the *face* of one piece and "bites" into the *edge* of the mating piece, as indicated in the photo below.

BENEFITS. It doesn't take long to see the benefits to this. Since these are butt joints, cutting pieces to length requires almost no math. You don't have to add or subtract the lengths of any tenons or allow for the depths of dadoes, grooves, or rabbets. Just measure, mark, and cut.

Creating the joint is fast too. That's because there are just two steps. First you drill the holes. Then you screw the pieces together. The only clamping that may be required is to keep the pieces from shifting while you're driving the screws. And if you reinforce the joint with glue, there's no waiting for it to set. As soon as the screws are in place, you can move on to the next joint.

POCKET HOLE JIG. Sound simple enough? It is. But like any method of joinery, you need to have the right tools on hand in order to work quickly and efficiently. This means you have to have a pocket hole jig.

As you can see in the box at right, there are a number of pocket hole jigs available. But they all do exactly the same thing: guide the drill bit so it will drill an accurate hole exactly 15° into the face of a workpiece, as in Fig. 1. That's all there is to it.

Note: The jig shown in this issue is the "Rocket" made by *Kreg Tool Company*. For sources, see page 35.

DRILL BIT. But there's more to pocket hole joinery than just a jig. You'll also want to have the right drill bit. It makes the job much quicker and the pocket holes more consistent.

What's unique about this special bit is that it drills two holes at once. The part you see, the oval-shaped counterbore, holds the head of the screw. It's just deep enough to put the head below the face of the workpiece. The second hole is for the shank of the screw to pass through.

Okay, you know *what* the bit does, but *how* does it drill both holes at the same time? Simple. The drill bit is "stepped" — about ½" of the tip is a smaller diameter than the rest of the bit, as in the right margin photo. I like the bits with square "steps" or shoulders (not the tapered ones). This way, the head of the screw has something solid to stop against, and there's less chance it will try to drive in farther.

CONSISTENT DEPTH. Of course, the holes have to be drilled at a consistent depth in the first place. So you need to have a stop collar for the drill bit. (Not all come with them.) And to set this collar, you need to know *where* the hole should stop.

I like the bit to stop so the shank hole ends up just short of the edge of the workpiece, as shown in Fig. 1a. If you drill completely through the piece, the wood usually splinters, which may prevent the two pieces from fitting together tight.

A simple jig, a special drill bit, and a self-tapping screw work together to create a fast, strong joint. ▼

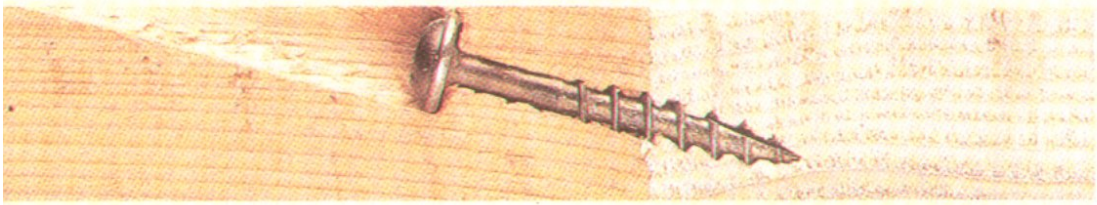

CORDED DRILL. When drilling the pocket holes, I like to use a corded, electric drill. It has more power and speed than a cordless drill, which is pretty helpful when drilling into hardwoods. Plus, you won't have to worry about running down the battery with repeated use.

WHICH WORKPIECE? As far as the drilling goes, that's about it. But there are a couple more things to mention. First, you need to decide which workpiece to drill the pocket in. I like to think of the screws as if they were tenons (or tongues, if I'm working with plywood panels). So the piece I'd normally cut the tenon on is usually the one that gets the pocket holes. Most times, this means the screw threads are cutting into edge or cross grain (which is much stronger than if the screws were being driven into end grain).

However, this isn't an unbreakable rule. On the entertainment center on page 6, I often drove the screws into the edge of a plywood panel rather than into the edge grain of the frame around it because I was able to hide the screws better.

STOCK THICKNESS. The other thing to mention is that pocket hole jigs are designed to work primarily with ¾"-thick stock, as shown in Fig. 1a. In other words, when the jig is aligned with the edge of the workpiece, the screw will come out roughly centered on the thickness of the stock.

However, the jig also can also be used to join 1½"-thick ("two-by") stock and ½"-thick stock (Figs. 1b and 1c). But you'll have to adjust the position of the jig on the piece and reset the depth collar. There can be a bit of trial and error here, and to check the setup, just run a screw through a test piece to see where it exits (and how far). Note: The *Kreg* jig shown here has an extra spacer for 1½"-thick stock.

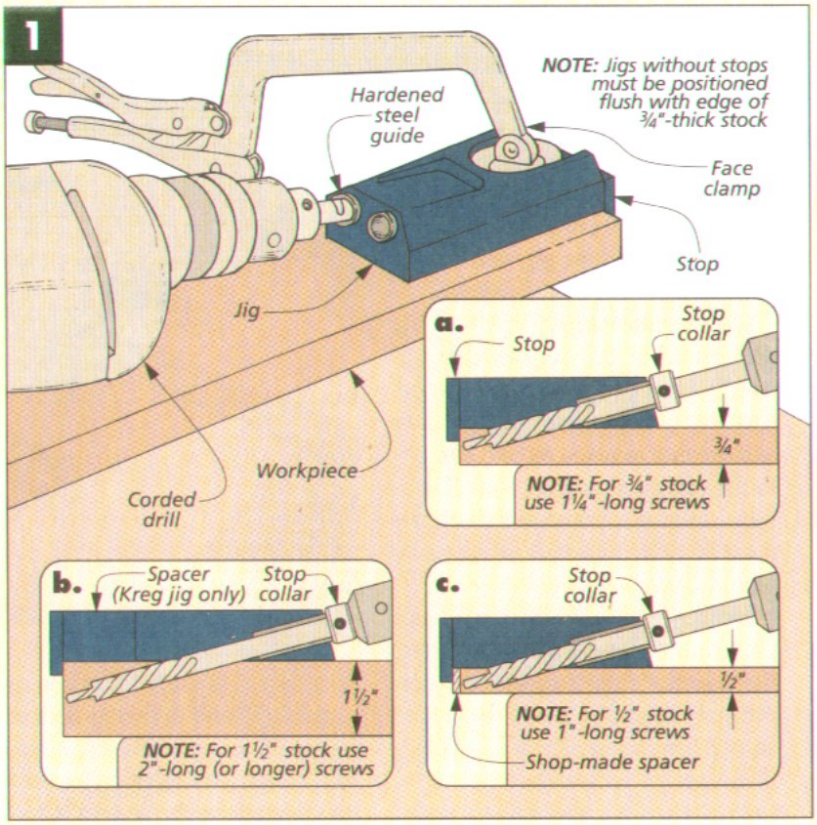

▲ *Like two drill bits in one, the bit used for pocket holes drills the counterbore and shank hole in one quick step. The stop collar ensures consistent results.*

PICKING A POCKET HOLE JIG

When you're ready to try pocket hole joinery, you won't have any trouble finding a jig. As you can see in the photo, there are at least a half dozen available, and you'll find them just about everywhere. (See page 35.) But when comparing the costs, make sure you know what you're getting — and what you're not.

JIG. When choosing a jig, there is really just one essential: hardened guides. (Most jigs do have them, but not all.) And I found the positioning stop on the end of the *Kreg* "Rocket" and some of the other jigs to be helpful. As far as being able to adjust the width between guides, it's often just as easy to reposition the jig.

DRILL BIT. Finding the right drill bit is as important as the right jig. I liked bits with square shoulders (instead of tapered). Plus you'll need a stop collar for the bit.

OTHER ITEMS. Besides these two items, you'll also need a long power driver and some special screws. (More on all this beginning on page 20.) Plus, *Kreg* sells a face clamp that's pretty handy.

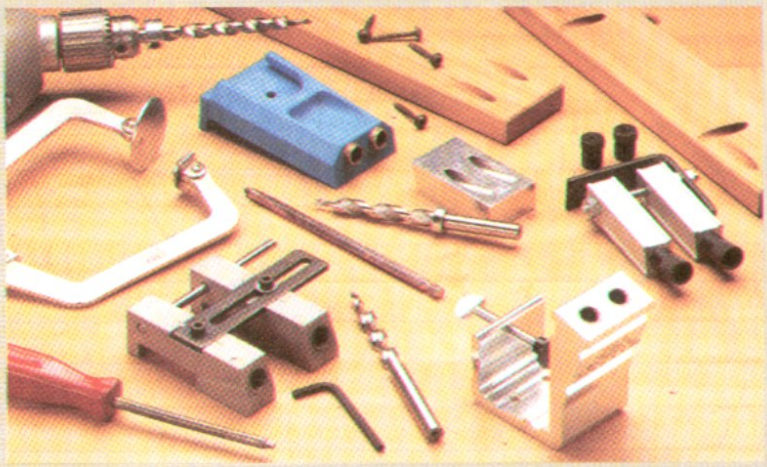

Assembly

As soon as the holes have been drilled, you're halfway to a strong pocket hole joint. The second step is to screw the workpieces together. This is just about as easy as it sounds, but again, there are some important differences from the way you're used to working with woodscrews.

SELF-TAPPING SCREWS. The first big difference is the screws that are used. Instead of regular woodscrews, pocket hole joinery uses self-tapping screws, as you can see in the margin drawing below. These have an auger point, which allows them to drive into the mating workpiece without splitting the wood.

Because these screws are self-tapping, you'll want to match the threads on the screws with the type of material you're using. But don't worry. The big decision is whether to choose fine or coarse threads.

Generally, the fine-threaded screws are for hardwoods, like oak, maple, and cherry. The threads have a shallow pitch so the screw drives in a bit slower than the coarse-threaded screws tend to. This way, these screws will be less likely to break when being driven into a hard piece of maple. (The shank of the screw is also thicker for this same reason.)

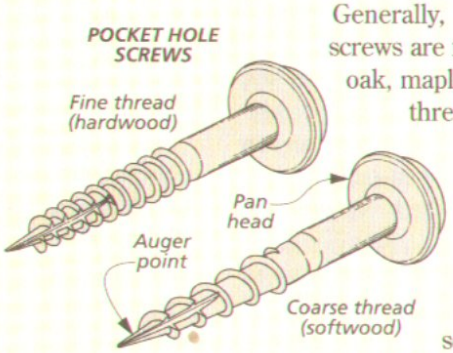

▲ *Pocket hole screws aren't your typical woodworking screws. They're panhead-type screws that have self-tapping threads and an auger point.*

Breaking screws is a little less of a concern for softwoods and plywood, so a coarse-threaded screw is more aggressive and drives in noticeably faster. However, with softer woods, like cedar, you need to watch that you don't drive the screws in too far. This is a real possibility — even with the square shoulder of the counterbore and the panhead on the screw.

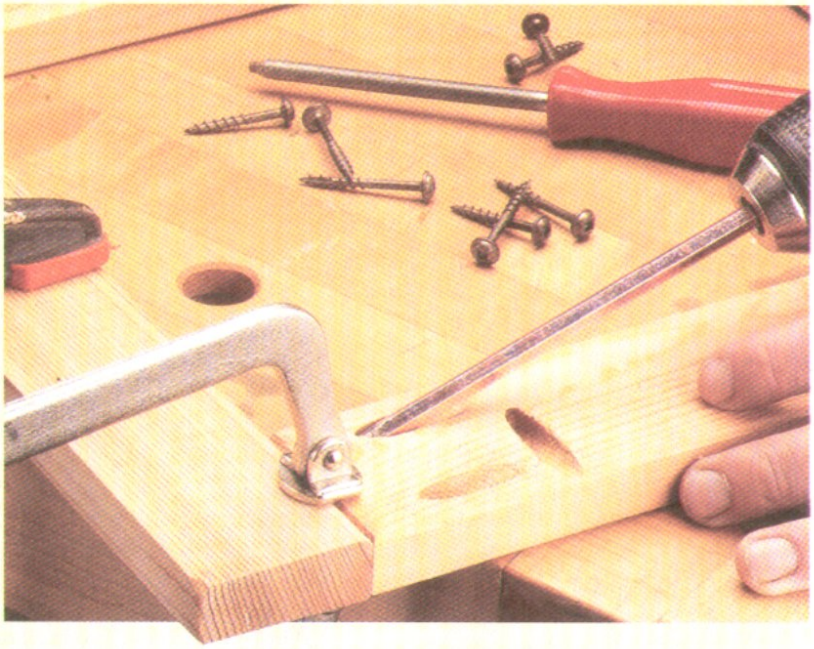

DRILL WITH CLUTCH. The way to prevent driving the screws in too far is to use a drill with a clutch. (This time, I use a cordless drill.) You can play with the setting, but with softwoods, it's going to be fairly light.

If you don't have a drill with a clutch, you might want to drive the screws in most of the way and then finish them with a screwdriver.

LONG DRIVER. Besides a drill with a clutch, you will also need a long driver. (The pocket hole screws I used were square drive.) You can get by with a 3"-long driver (and anyway, it's a good idea to have one on hand when you need to get into a tight corner), but you'll find that a 6"-long driver is much easier to work with. It lets you drive the pocket screws in at the shallow 15° angle and still have enough clearance for the chuck of the drill.

ASSEMBLY. When you're ready to screw the two pieces together, the important thing is to make sure they're not going to shift during assembly. Remember, the shank hole is a smaller diameter than the threads of the screw, and it's not drilled completely through the first piece. So the two pieces will want to pull apart slightly as the threads of the screw start to engage the mat-

ASSEMBLY PLATFORM FOR POCKET HOLE JOINERY

With pocket hole joinery, the key to a good assembly is to keep the pieces from shifting while the screws are being driven. For face frames and other flat assemblies, I came up with this plywood platform.

Two short fences position the workpieces 90° to each other, and to help keep the pieces from shifting while the screws are being driven, I placed strips of adhesive-backed sandpaper across the base.

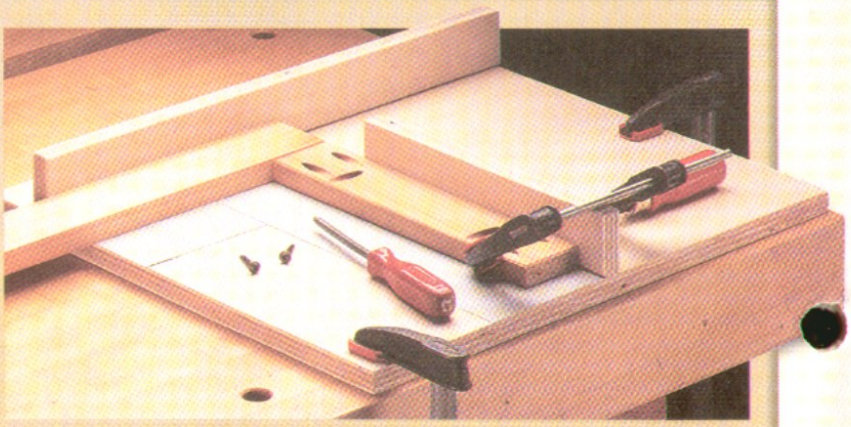

ing piece, especially with the more aggressive, coarse-threaded screws. The screws will pull the joint back tight, but sometimes, the pieces will have shifted slightly so that there's a small shoulder between them.

There are a couple of ways to prevent the workpieces from shifting. *Kreg* offers a face clamp that has a large, flat disc welded to one of the pads, refer to the main photo on page 18. (For a list of sources, see page 35). This disc is positioned across the outside faces of the workpieces to hold them flush. This doesn't actually keep them from separating. Instead, it prevents the faces from shifting out of alignment, and in my experience, the screws always pulled the two pieces back tight with no shoulder.

The other way to hold the workpieces is simply to clamp them like you typically would if they were being assembled by some other method — only you won't need to leave the clamps on. Or for flat assemblies, like face frames, you can use the assembly platform shown in the box on page 20.

GLUE. By the way, whether or not you add glue to the joint is up to you. Even though the pocket screws are plenty strong, I generally think it's a good idea. Just go light on the glue so there's not a lot of clean up.

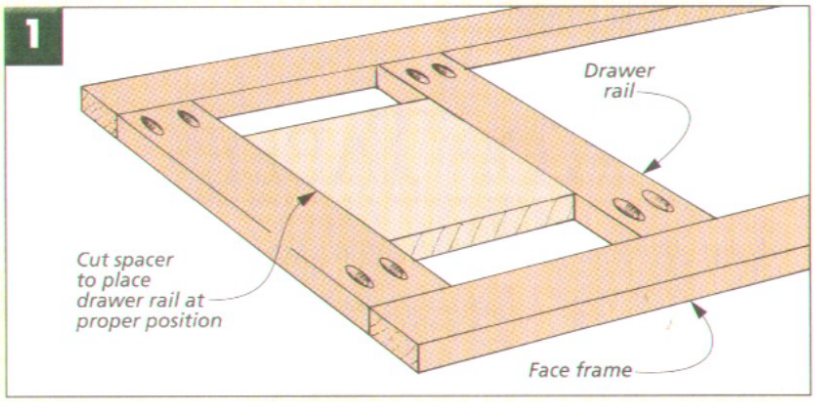

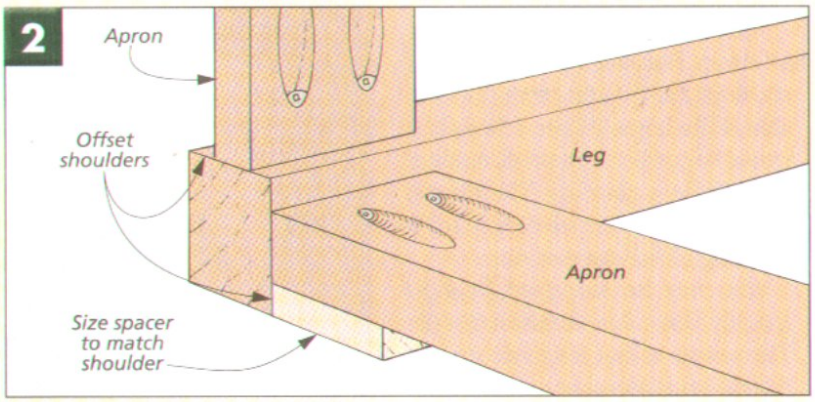

ASSEMBLY TIPS

That's essentially all there is to assembling a pocket hole joint. But not all assemblies are quite so straightforward. There are plenty of situations when you could use a little help positioning a workpiece. However, it's really just a matter of getting used to a new method of assembly with a different set of challenges than traditional gluing and clamping. And the solution is usually as easy as adding a scrap spacer or cleat.

DRAWER RAILS. Take a face frame with a drawer opening, for instance. Once the outside frame is assembled, I like to cut a scrap piece to match the height of the drawer opening, as you can see in Fig. 1. This spacer makes positioning the drawer rail quick and accurate — especially if you're building more than one face frame.

OFFSET SHOULDERS. Another time a spacer comes in handy is when you *don't* want the faces to end up flush. When building a table base, I usually like to set the aprons back from the outside faces of the legs, as in Fig. 2. To create this shoulder with pocket hole joinery, all you need to do is slip a small spacer under the piece you want offset.

CASE CONSTRUCTION. Other times, you'll need to make cleats and corner braces, as I did on the entertainment center. (Refer to Figs. 3 and 4 on page 9.) However, since there are no rabbets or dadoes to position the workpieces, you have to be doubly sure they're square and aligned properly before you add the screws.

All in all, I'd have to say that pocket hole joinery is pretty impressive. It's fast and strong, and there are lots of times when that's exactly what I need. It won't replace traditional joinery in my shop, but the jig is a good tool to have on hand. W

PLUGGING A POCKET HOLE

Most of the time, a pocket hole is hidden inside a cabinet. Other times, you might hesitate to use this joinery because the oval-shaped holes would be visible. But there's a way to make these holes nearly disappear or "dress them up" by simply adding a plug. As you can see in the photo, *Kreg* currently offers a variety of hardwood and plastic plugs made just for this purpose. Simply glue the plug into the hole. ("Instant" glue works well here.) And the wood plugs can be trimmed with a chisel or sanded flush.

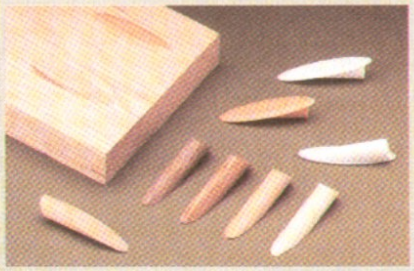

TILE-TOP TABLE

How do you build a sturdy outdoor table without any tricky mortise and tenon joinery? Using pocket screws makes it quick and easy.

Ceramic tile is normally meant for floors. But after seeing the dozens of colors, finishes, and textures available at the home center, I thought it would be perfect for a small, outdoor table I'd been planning. The tile will take whatever the elements (or a drinking glass) can dish out.

You may be surprised by how quickly this table comes together. The secret is that it's made up of a half-dozen frames put together with pocket screws. Four frames form the base, and two more surround and support the ceramic tile.

BASE

The first set of frames to make are the ones that form the base.

STILES. I started by making the stiles (the longer pieces of each frame). There are four *narrow stiles (A)* and four *wide stiles (B)*, as shown in Fig. 1. When the base is assembled, the edge of a narrow stile will fit into a rabbet in a wide stile, as shown in Fig. 1a. This way, the stiles all look the same width.

After cutting the stiles to size, you can cut the taper at the bottom of each one, as shown in Fig. 1b.

The last thing to do to the stiles is to rout chamfers on the edges with the tapers, and also along the bottom edges, like you see in Fig. 1b.

RAILS. Each pair of stiles is joined by a couple of rails. If you look at Fig. 1 again, you can see that the *rails (C)* are identical in size, with two pocket holes drilled near each end. (There's more about pocket hole joinery on page 18.)

MATERIALS, SUPPLIES, & CUTTING DIAGRAM

A	Narrow Stiles (4)	¾ x 2 - 16½
B	Wide Stiles (4)	¾ x 2¼ - 16½
C	Rails (8)	¾ x 2¼ - 10⅞
D	Cleats (2)	¾ x ¾ - 13⅞
E	Slats (5)	¾ x 2¼ - 13⅞
F	Molded Rails (2)	¾ x 3¼ - 10⅜
G	Molded Stiles (2)	¾ x 3¼ - 16⅞
H	Top Rails (2)	¾ x 3 - 11⅞
I	Top Stiles (2)	¾ x 3 - 17⅞
J	Spacers (4)	7/16 x 1½ - 11⅞

- (56) #6 x 1½" Coarse Thr. Pocket Screws
- (18) 1¼" Deck Screws
- (1) 12" x 12" Ceramic Tile

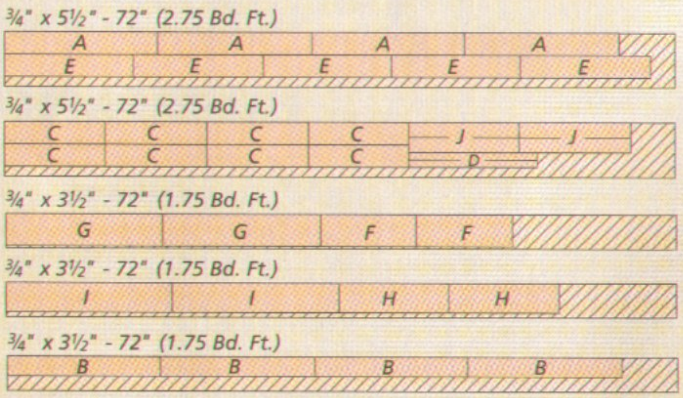

The differences between the top and bottom rails are that the top rails have two more pocket holes. These are used later to secure the top of the table. Also, the bottom rails have chamfers on all the edges, while the top edges of the top rails remain square, as shown in Fig. 1b. (Square edges provide a broader surface for attaching the table top.)

The pocket screws make it quick and easy to fasten the rails to the stiles. Just make sure each assembly has two stiles of the same width.

RABBETS. After the frames are screwed together, the wide stiles get a rabbet cut along the edge, as shown in Fig. 1a. I did this with a dado blade, but it also can be done with a regular blade. Details about doing this are on page 25.

ASSEMBLY. When dry assembling the frames into a base, I had trouble keeping things square. A solution is shown in the photo at right.

Once the base is assembled, you can hide the joint lines with a little chamfering trick illustrated in Fig. 2a. Simply adjust the height of the bit until it just touches the joint line.

CLEATS. The shelf in the bottom of the table is a just a series of slats. To support them, I cut two *cleats (D)* to fit inside the base (Fig. 2b).

If you look at Fig. 2c, you'll see that later, slats are screwed to the cleats. So I drilled the shank holes and countersinks for these screws now, before the cleats are glued in place. Finally, the cleats are glued to the base so the slats (added next) will sit flush with the top of the rails.

SLATS. Now you can move on to the slats (Fig. 2). After the *slats (E)* are cut to size and chamfered, they can be screwed to the cleats. To center the slats in the base, I secured the middle one first, then spaced the remaining slats 1/2" apart (Fig. 2c).

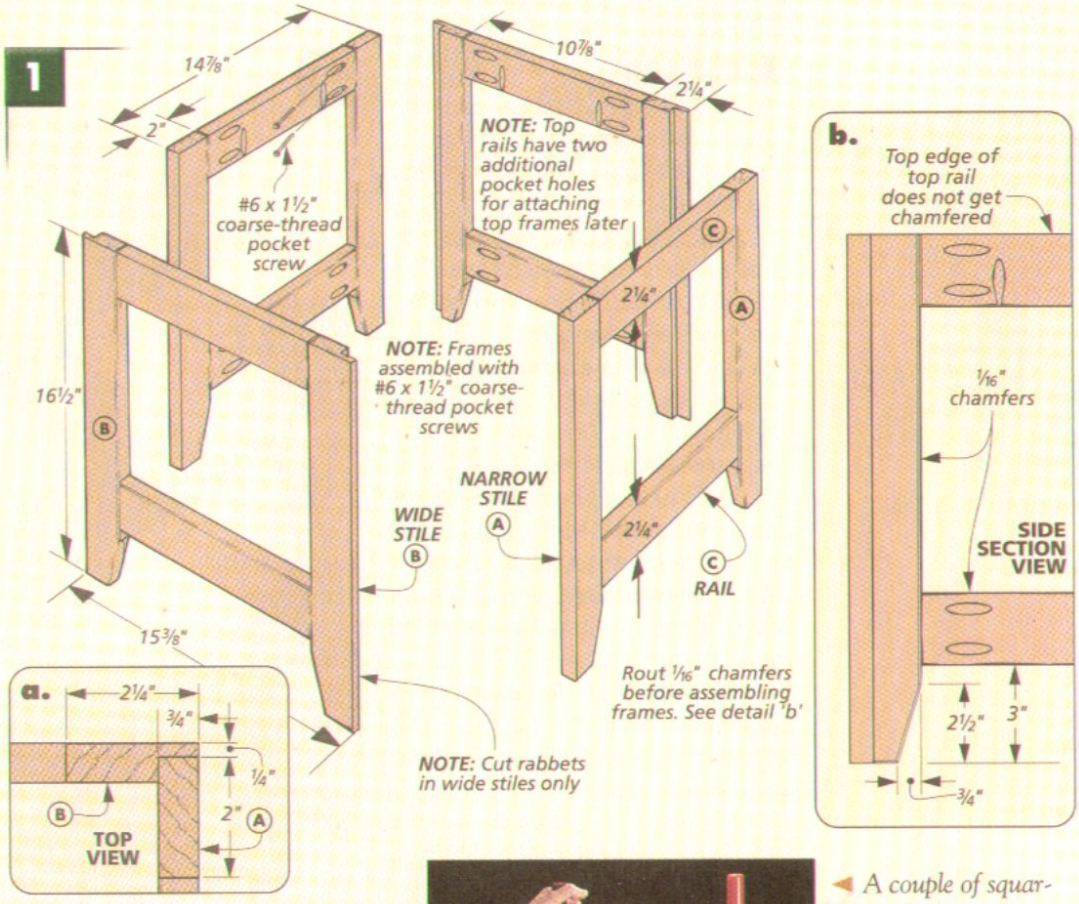

A couple of squaring forms cut from scrap plywood help keep the base square while the band clamps are tightened. Use an exterior grade glue when assembling the base.

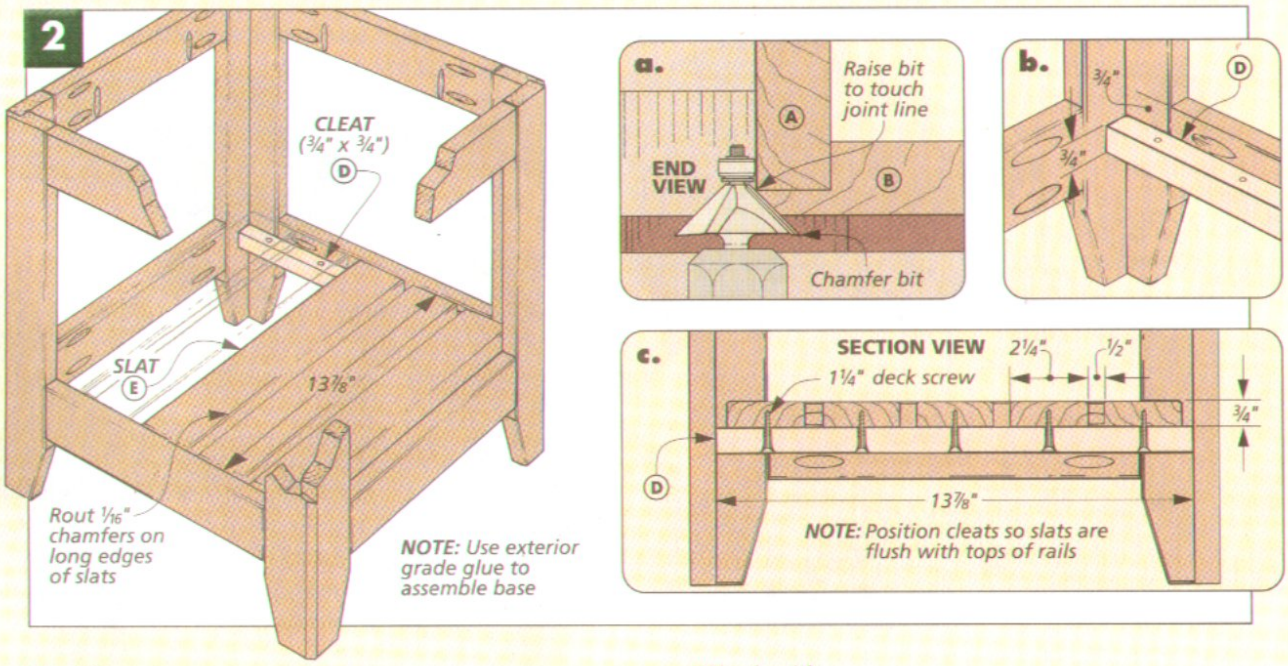

Table Top

The top of the table consists of two frames that support and surround the ceramic tile, plus some spacers that the tile will rest on.

MOLDED FRAME. The first frame to make is the lower, molded frame. The *molded rails (F)* have two pocket holes drilled towards each end and a shank hole for a screw centered on their width and length, as you can see in Fig. 3. The *molded stiles (G)* each get three shank holes.

After assembling the molded frame with pocket screws, rout a cove around the bottom edge (Fig. 3b). With that completed, you can set the molded frame aside for now and move on to the top frame.

TOP FRAME. The exact lengths of the rails and stiles for the top frame will depend on the size of your tile. What you want to end up with is a 1/16" gap between each edge of the tile and the top frame. To accomplish this, just measure the width of the tile. Then add 1/8" to this measurement to find the length of the *top rails (H)*. The *top stiles (I)* should be 6" longer than the rails. (This accounts for the combined width of the rails.)

Before assembling the frame with pocket screws, rout a chamfer around both faces of each piece (Fig. 3).

Once both frames have been assembled with pocket screws, they can be glued and screwed to each other. As you can see in Fig. 3a, I used deck screws for this. The two things to keep an eye on here are that the molded frame is centered on the top frame and that the joints are offset. This strengthens the assembly. (Look at Fig. 3 to see what I mean.)

Then center the frames on the base and screw them in place using the two pocket holes in each of the top rails of the table base.

SPACERS. The *spacers (J)* support the tile and lift it flush with the top frame, as shown in Fig. 4a. For this reason, they have to be planed or resawn to thickness. Then they're glued to the molded frame (Fig. 4).

FINISH & TILE. The table is just about complete at this point. Before fastening the tile in place, I wiped on two coats of an outdoor oil to provide a weather-resistant finish. Then all that remains is to fasten the tile in place, as shown in the photo below.

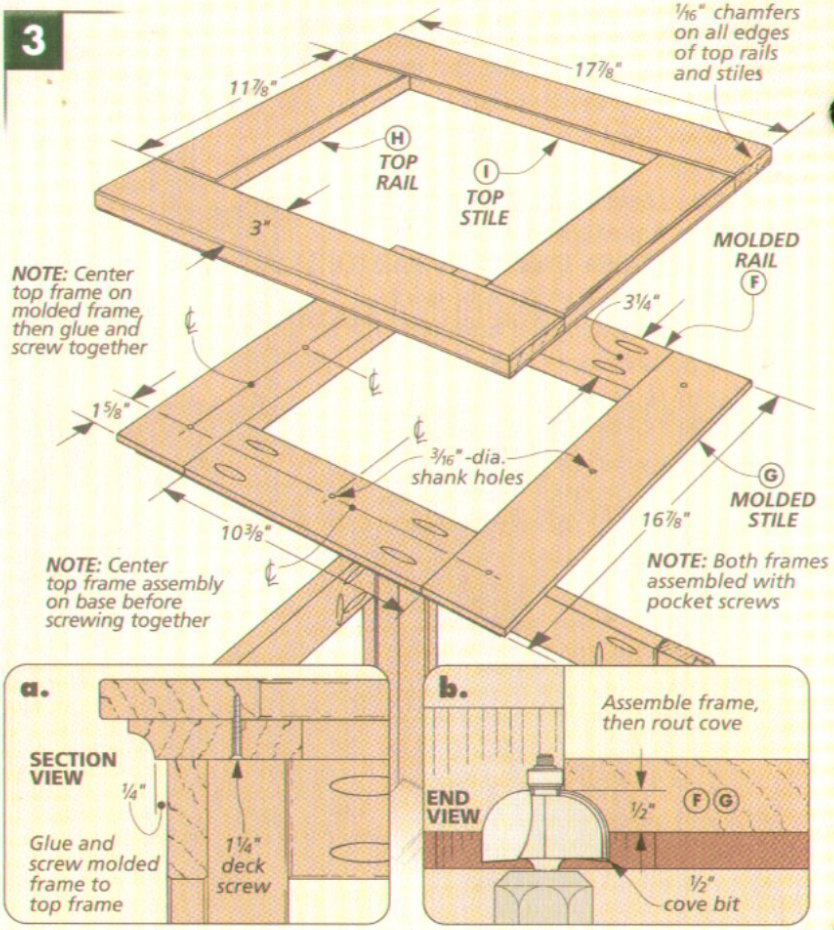

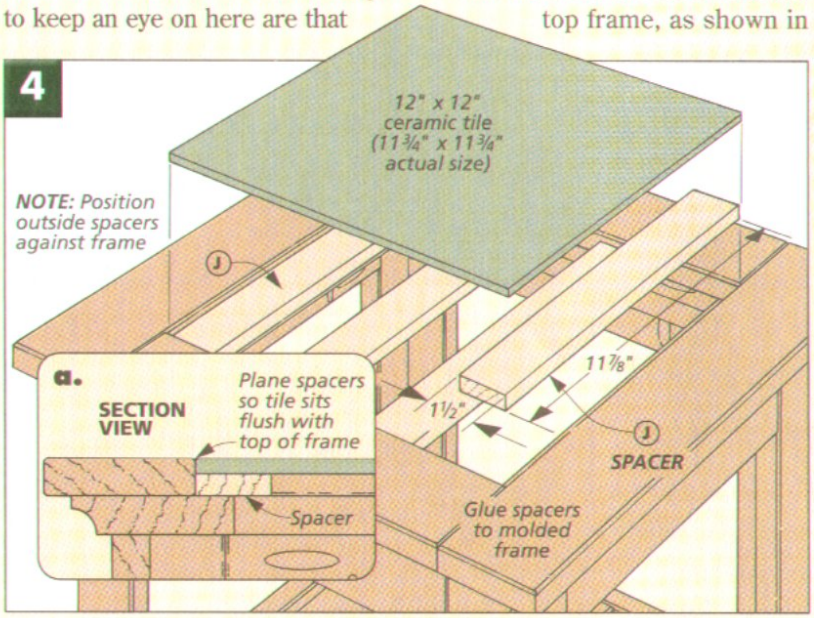

▲ *To secure the ceramic tile, put a dot of silicone adhesive toward each end of each spacer, then press the tile firmly into place.*

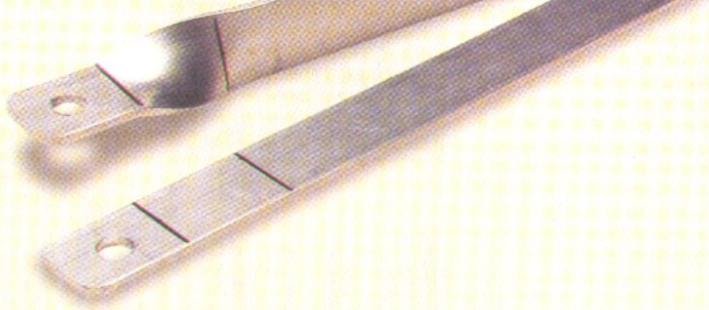

SHOP NOTES

Shop-Made Bracket

The bench on page 26 folds with the help of an aluminum bracket. This piece of hardware isn't one you'll find at a store, but it's easy enough to make with a short piece of 1/8" x 1" aluminum bar stock.

The "twist" to this piece of hardware is just that — a twist. It creates more clearance so the bench can fold relatively flat, refer to the lower detail drawing on page 27. And don't worry. To create this twist, all you need is a vise and a clamp.

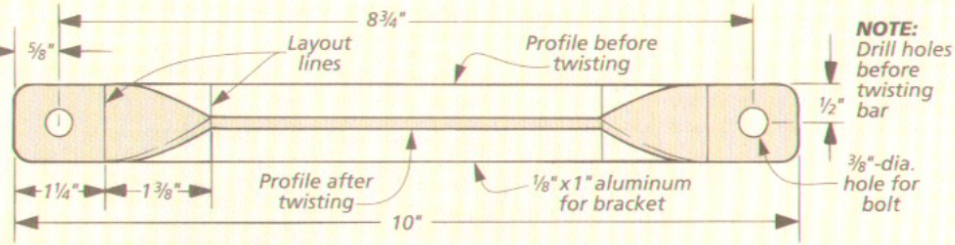

PREPARE BAR. The first thing to do is get the bar ready. After cutting it to length (10"), I smoothed the rough edges and rounded the ends with a file, see drawing above. Then the holes for the carriage bolts can be drilled near the ends.

TWIST BAR. Before twisting the bar, you'll want to draw a couple of layout lines at each end to guide you. Then clamp the bar in a vise so the layout line nearest the end is flush with the vise jaws, as in Photo 1 below.

Next, secure a clamp to the bar even with the next layout line (Photo 2).

Now you are ready to twist the bar. Rotate the clamp slowly and steadily, as shown in Photo 3. You'll need to twist the clamp slightly past 90° because the aluminum will spring back slightly.

Rabbeting with a Regular Blade

To cut the rabbets on the frames of the Tile-Top Table (page 22), I used a dado blade. But these rabbets can also be cut in two steps with a regular blade.

First, cut a 1/2"-deep kerf, as shown in Fig. 1. Here the distance from the fence to the *far* side of the blade should equal the stock's thickness (3/4").

The second pass will require a tall auxiliary fence for extra support (Fig. 2). Then just set the fence and blade to leave a 1/4"-thick tongue.

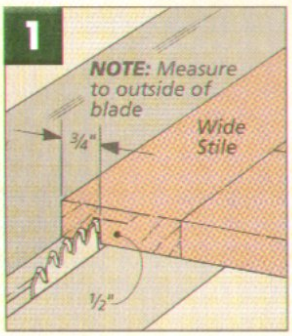

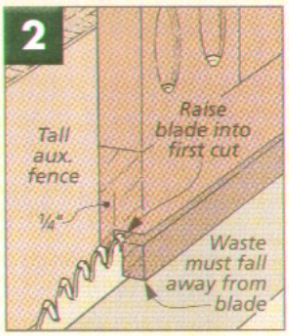

Custom Fit Seat Support

When cutting the seat support for the bench on page 26, the back edge probably won't fit flush against the long leg when it's assembled, as in detail 'a' below. It's easy to be slightly off with these curved pieces.

So to transfer the exact angle of the long leg to the seat support, all you need is a small compass, as shown in the drawing. Set the compass to match the gap and run it against the edge of the leg. Then you can sand the end of the support to the line.

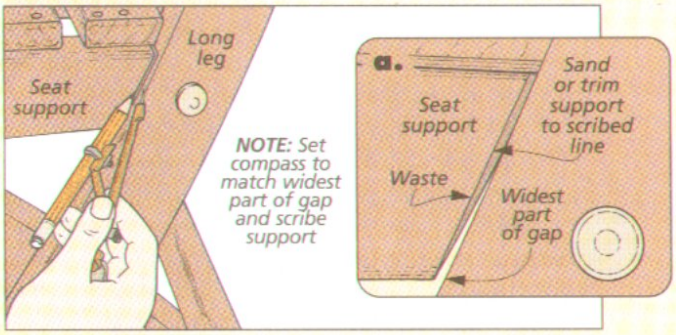

FOLDING BENCH

You'll be impressed by how sturdy and comfortable this bench is. Fold it up, and you'll be surprised by its light weight and portability.

Most outdoor benches are big and heavy. And as a result, they stay outdoors, in one place, year round, suffering through whatever the weather dishes out. But this bench was made to be light, yet sturdy. With just a quick pull on the handle in the back of the seat, the bench folds up, so you can easily pick it up and move it (see inset photo). And when the bench is folded, it's easier to store when the season is over.

WEATHER-RESISTANT MATERIALS. Even though the bench can be folded and stored out of the weather, it's likely it will still spend considerable time outdoors. So it makes sense to use materials that will hold up. That's why I chose cedar for my bench. (All the pieces are cut from regular "two-by" and "one-by" dimensional lumber.) Plus cedar is a light wood. That reduces the weight of the bench, making it easier to carry.

I also chose hardware that would endure the weather. The fasteners are all stainless steel. (See the box on page 31 for more about working with stainless steel hardware.)

FINISH. A project like this needs an outdoor finish, so I used an exterior penetrating oil. And to keep the finish fresh and the wood protected, I plan to wipe on an additional coat each spring when I get the bench out.

▲ *Whether you want to move out of the sun or inside for storage, this bench is easy to fold and carry. Just grab the hand-hold in the back of the seat and lift.*

CHAIR. One of the great things about the design of the bench is how easily it can be adapted to become a chair. If you'd like to learn more about this option (and get a set of measured shop drawings for it), see the On-line Extras box on the opposite page for details.

Construction Details

OVERALL DIMENSIONS:
40"W x 22¾"D x 36½"H

NOTE: *Full size patterns of curved parts are available. See On-line Extras box below.*

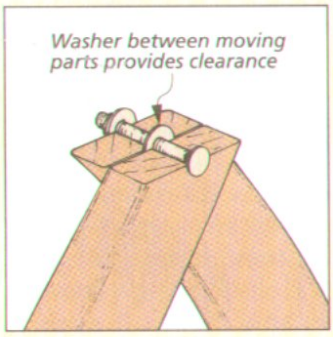

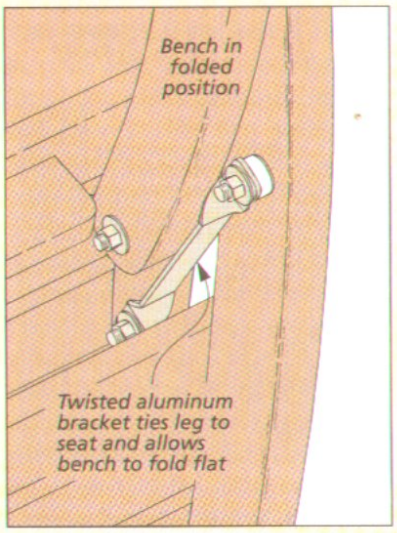

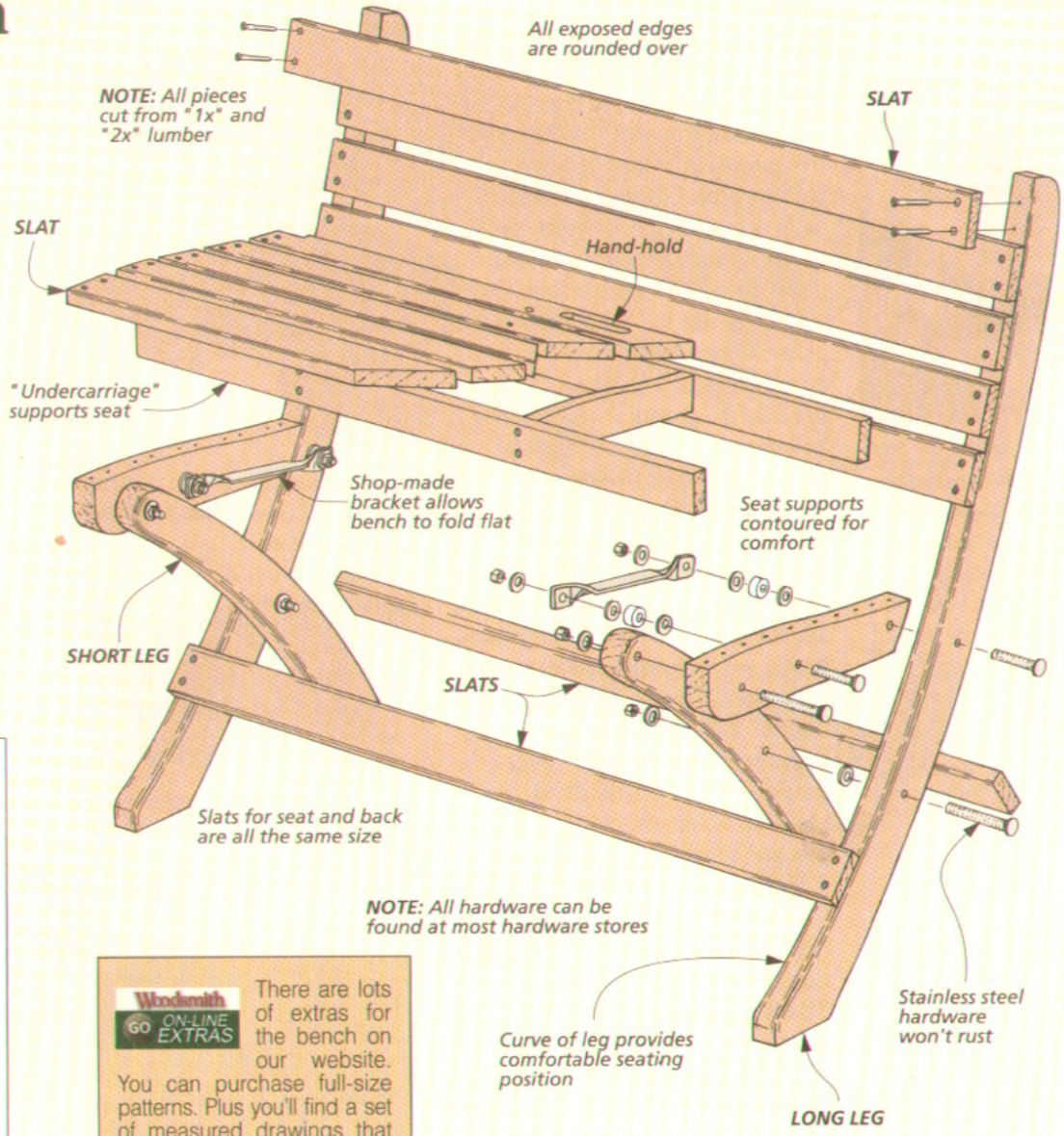

Woodsmith GO ON-LINE EXTRAS

There are lots of extras for the bench on our website. You can purchase full-size patterns. Plus you'll find a set of measured drawings that convert this bench plan into a matching folding chair. Just go to www.woodsmith.com.

MATERIALS, SUPPLIES, & CUTTING DIAGRAM

A	Seat Supports (2)	1½ x 3 -14 9/16
B	Slats (12)	¾ x 2½ - 40
C	Short Seat Supts. (2)	¾ x 2½ - 11¼ (rgh.)
D	Long Seat Supts. (2)	¾ x 2 - 33
E	Long Legs (2)	1½ x 6 - 41⅛
F	Short Legs (2)	1½ x 4 - 24⅜

- (70) #8 x 1½" Fh Stnls. Steel Screws
- (4) ⅜" x 3½" Stnls. Steel Carriage Bolts
- (4) ⅜" x 2½" Stnls. Steel Carriage Bolts
- (8) ⅜" Stainless Steel Hex Nuts
- (20) ⅜" Stainless Steel Flat Washers
- (1) ⅛" x 1" x 24" Aluminum Bar
- (4) ⅜" x ⅜" x 1" Nylon Spacers

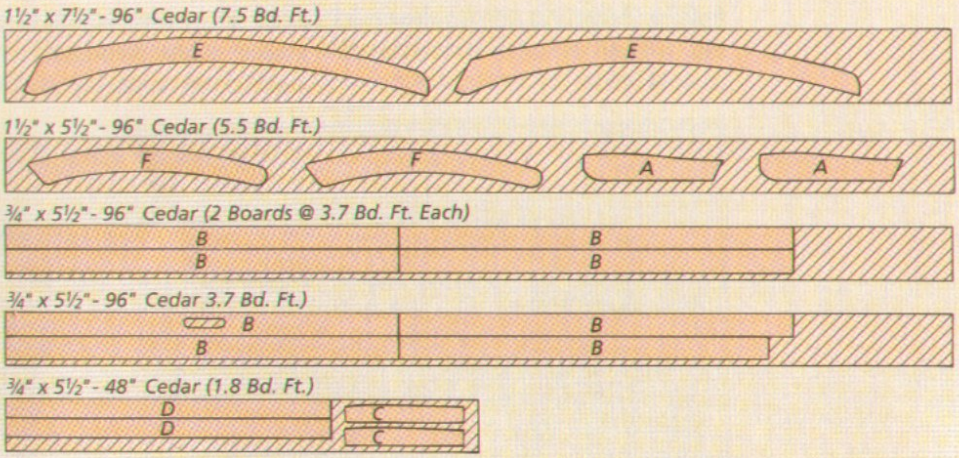

Seat

There are just two assemblies to the bench — the seat and the legs. I started by building the seat.

To make the seat comfortable, the supports below it have a gentle curve. Getting two identically curved pieces can be tough — unless you do what I did and make a template first.

I like to use 1/4" hardboard or plywood for templates. It's easier to fine-tune a shape on thinner (and cheaper) material before transferring the shape to each workpiece. (Full-size patterns of several pieces are available. See page 35 for details.)

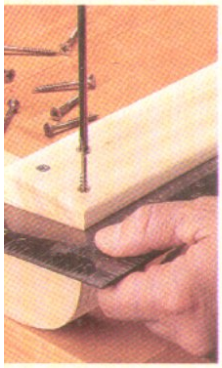

To square the seat assembly, place a framing square against the seat slat and the seat support before driving the second screw in each slat.

SEAT SUPPORTS. The first template to make is for the *seat supports (A)*, see the pattern below. In addition to laying out the shape of the support, it's a good idea to lay out the locations of the bolt holes while the template still has straight edges to measure from. Then cut the template to rough shape on the band saw and sand up to the layout lines. And finally, drill out the holes.

With the template completed, use it to lay out the shape and hole locations on two seat support blanks. Then, as you can see in Fig. 2, the supports are brought to shape the same way as the template. (On thicker pieces like this, a drum sander in the drill press makes the sanding go more quickly.) Then the holes can be drilled, and the edges eased with 1/8" roundovers.

SLATS. The slats for the seat are the next pieces to work on. The *slats (B)* are made by cutting 1x6s to a finished length of 40", as shown in Fig. 1. Then these pieces are ripped to width (Fig. 1b).

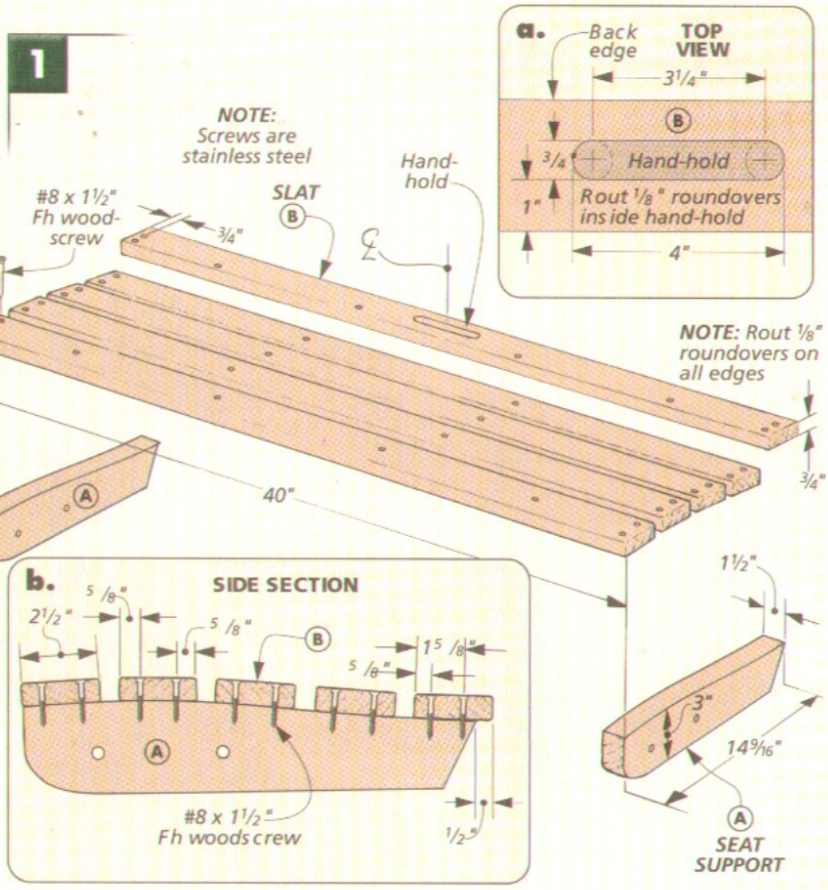

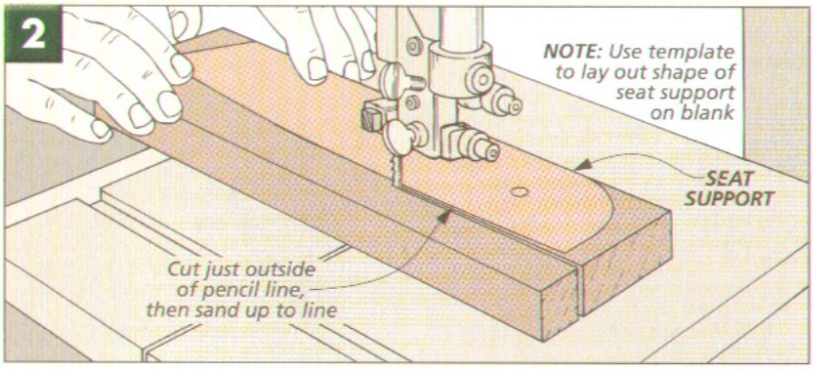

There are just a couple more details to take care of with the slats. The first is to cut a hand-hold in one of the slats, like you see in Fig. 1a. After that's done, you can soften the edges of the hand-hold with 1/8" roundovers on the top and bottom.

HARDWARE. Before you start assembling the seat, there's something to consider about the hardware. Regular woodscrews aren't meant to be out in the weather and will begin to rust in short order. Plus, with cedar, the iron in regular

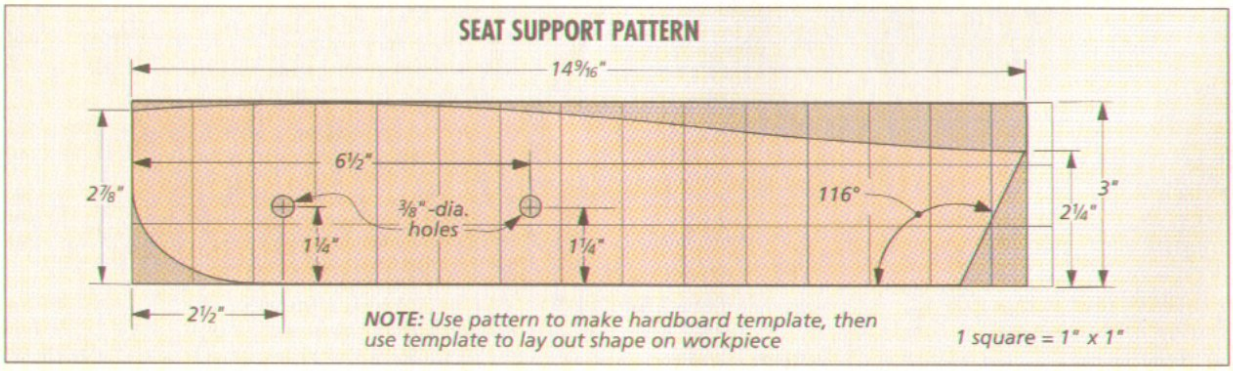

screws will react with the wood causing unattractive black streaks around the screw. To avoid this, I used stainless steel screws that can be found at most home centers. (The box on page 31 has more information about this.)

ASSEMBLY. Assembling the seat is straightforward. It's just screwed together. The trick is getting the slats spaced evenly. To do this, I fastened the front and back seat slats in place first, with their ends flush with the outside edges of the seat supports. Note that the back slat overhangs the end of the support by 1/2" (Fig. 1b). Just use one screw in each end of each slat for now. That way you can square the assembly, as shown in the photo on the opposite page before driving a second screw.

Now all you have to do is space the three remaining slats evenly between the front and back slats.

SEAT SUPPORTS. If you look at Fig. 3, you can see that a rectangular assembly is added below the seat to strengthen it. The first pieces to make are two shorter versions of the seat supports. Again, I made a template. But this time, there's only one curved edge, and you'll be able to use the seat support template to draw this curve, as you can see in the pattern below.

After you cut and sand the *short seat supports (C)* to shape, rout 1/8" roundovers on the bottom edges only. Note that the short supports don't need any bolt holes.

The short seat supports are fastened between a couple of *long seat supports (D)* that run under the front and back seat slats. After the long supports are cut to size, as shown in Fig. 3, the bottom edges and ends can be rounded over. Then the short seat support pieces are screwed between them.

Once the assembly is screwed together, it can be fastened under the seat assembly, centered on its length. One thing to watch for here is that the long support in back sits between the edge of the hand-hold and the front edge of the back slat, like you see in Fig. 3b. Finally, screw the slats to all four seat supports.

NOTCH. As Fig. 4 shows, the last thing to do is to cut a beveled notch in the rear slat. This lets the seat fit around the legs that are added later.

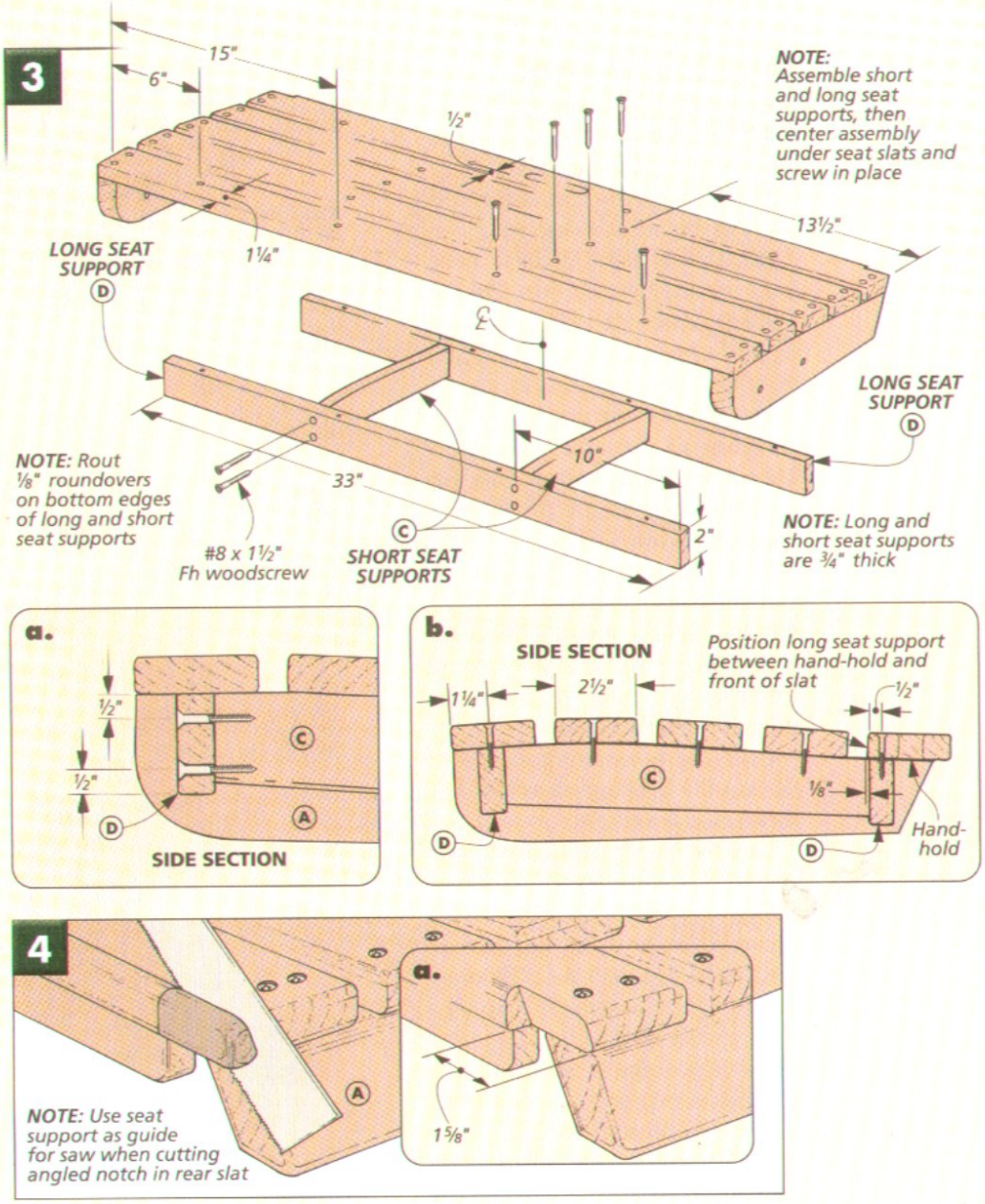

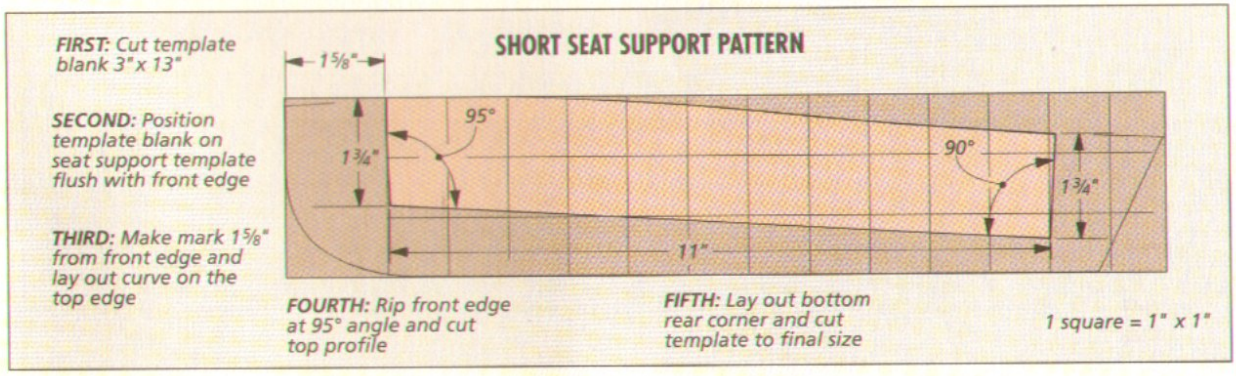

Long Legs & Back

Now that the seat is assembled, you can begin work on the back of the bench. This consists of a half-dozen slats attached to two pieces that also serve as the bench's long legs.

LONG LEGS. The first pieces to make are the *long legs (E)*. Just like the seat supports, I started by making a template from hardboard. The pattern for the long legs is shown below. (Make sure you lay out the locations of the bolt holes too.) Then after cutting and sanding the template to shape, use it to lay out the outline of the legs on 2x8 stock.

Before cutting the legs to shape, I took the blanks to the drill press to drill the 3/8"-dia. holes. I found it's easier to hold them in place against the drill press fence while the legs still have straight edges.

Once the holes are drilled, you can cut the long legs to shape and round over the edges.

SLATS. Six identical slats tie the two long legs together. If you take a look at Fig. 5, you can see that five of these slats make up the back rest of the bench. The sixth slat is fastened toward the bottom of the long legs to serve as a stretcher.

After these pieces are cut to size and the edges are rounded over, you're ready to start assembling the back. Positioning the slats for the back rest is a lot like positioning the seat slats. First, attach the top and bottom slats to the long legs. (The top slat is flush with the ends of the legs.) Again, just use one screw in each end until you get the assembly square. Then, as you did with the seat, space the three remaining slats evenly between the other two.

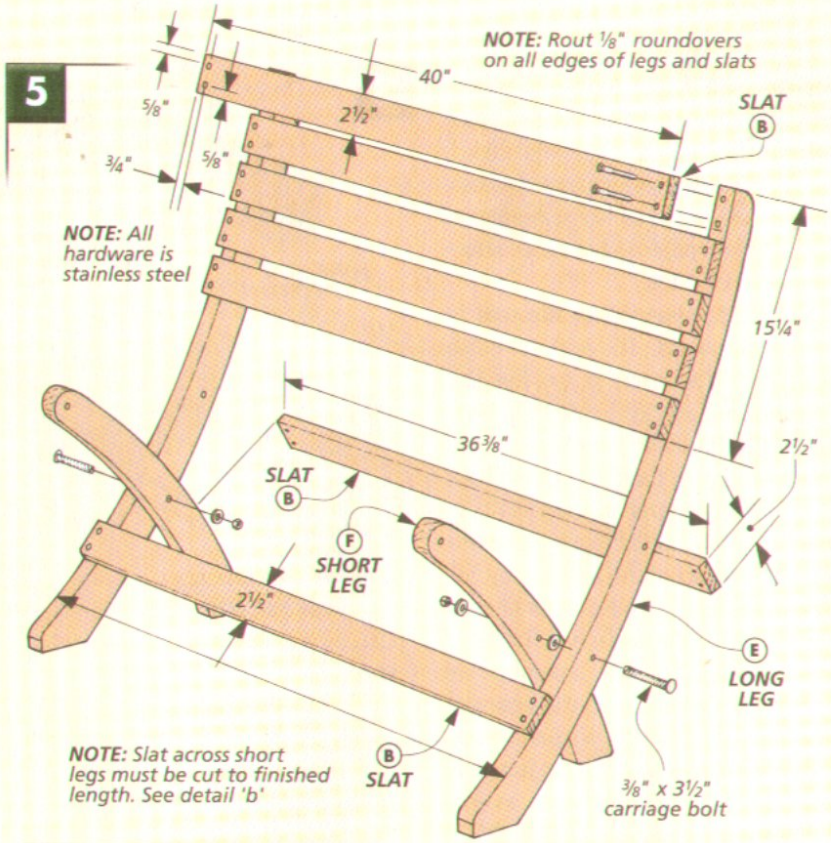

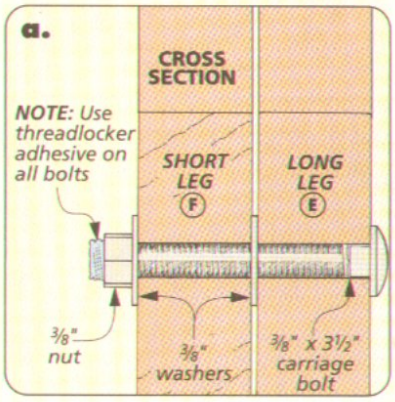

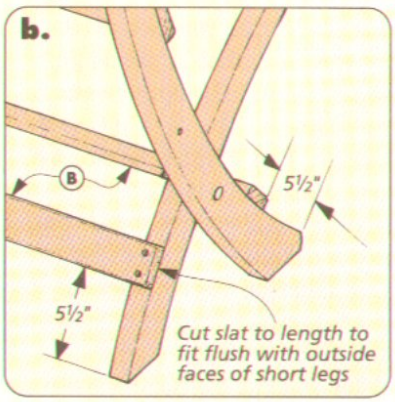

If you'll look at Fig. 5b, you can see that the position of the stretcher slat (the one toward the bottom of the legs) is determined by measuring up from the bottom of the leg. Once you've made your layout marks, go ahead and screw the slat to the front edges of the legs.

SHORT LEGS

There are only three more pieces to make for the bench. By now, the process used to make a template and shape the *short legs (F)* should be familiar. (The pattern for the short legs is at the bottom of the opposite page.) After drilling the holes, cutting

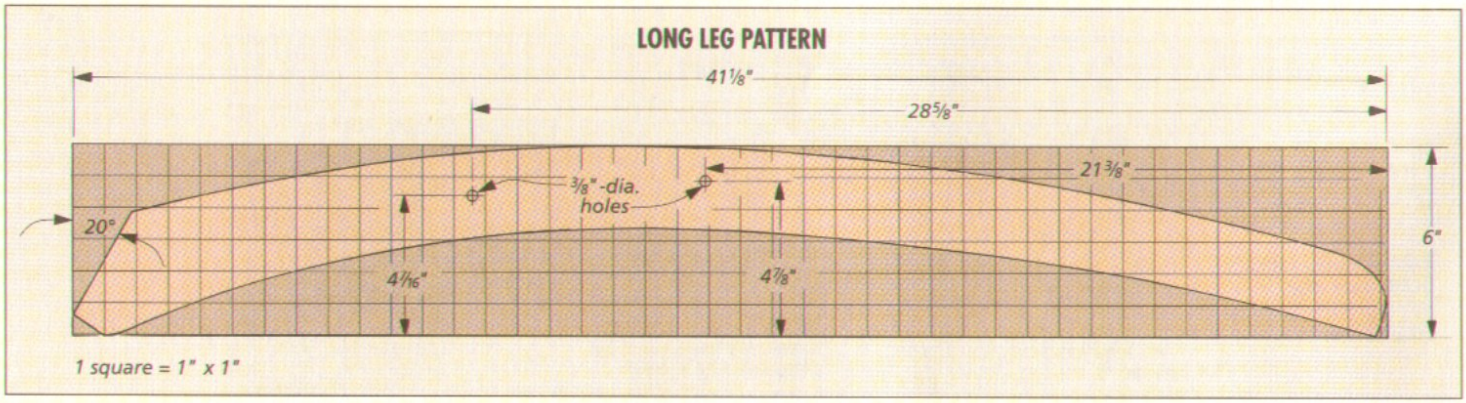

and sanding the short legs to shape, and rounding over the edges, you're ready to assemble the bench.

ASSEMBLY. The secret to making the bench fold is a set of stainless steel carriage bolts that serve as pivots.

The first thing to do is to bolt the short legs to the long legs, like you see in Fig. 5. A washer between the pieces provides clearance so the legs won't bind when the bench is folded up (Fig. 5a). Note: To prevent the nuts from coming loose, apply thread-lock adhesive to all bolts.

Once that's done, a slat can be cut to length so that it runs to the outside faces of the short legs. You can see this in Fig. 5b. Remember to rout roundovers on all the edges before screwing the slat to the legs.

If you take a look at Fig. 6, you see that the next step is to bolt the seat assembly to the short legs. Again, a washer is used between the pieces to provide clearance (Fig. 6a).

ALUMINUM BRACKET. At this point, the bench looks almost done — except that it won't stand up. That's where the real key to this folding bench comes in. As you can see in Fig. 7, a metal bracket is added to tie the seat assembly to the long leg.

The bracket starts out as a length of 1/8"-thick flat aluminum bar. You'll notice however, that it doesn't stay flat — there's a twist at each end. This keeps the bracket from hitting the back slats when the bench is folded. The twist is easy to form with a bar clamp and a vise. Details about doing this are on page 25.

Once the brackets are twisted to shape, they're bolted in place with washers. Nylon spacers help to align the parts and provide clearance, as illustrated in Fig. 7.

After getting the bracket in place, I found that the seat didn't rest tightly against the long leg. The problem was that the angle at the end of each seat support didn't quite match the slope of the leg. I'll show you how I fixed this on page 25.

All that's left is to sand the bench and apply a finish. I used an outdoor oil. To keep the bench in top shape, I'll apply a fresh coat each year. W

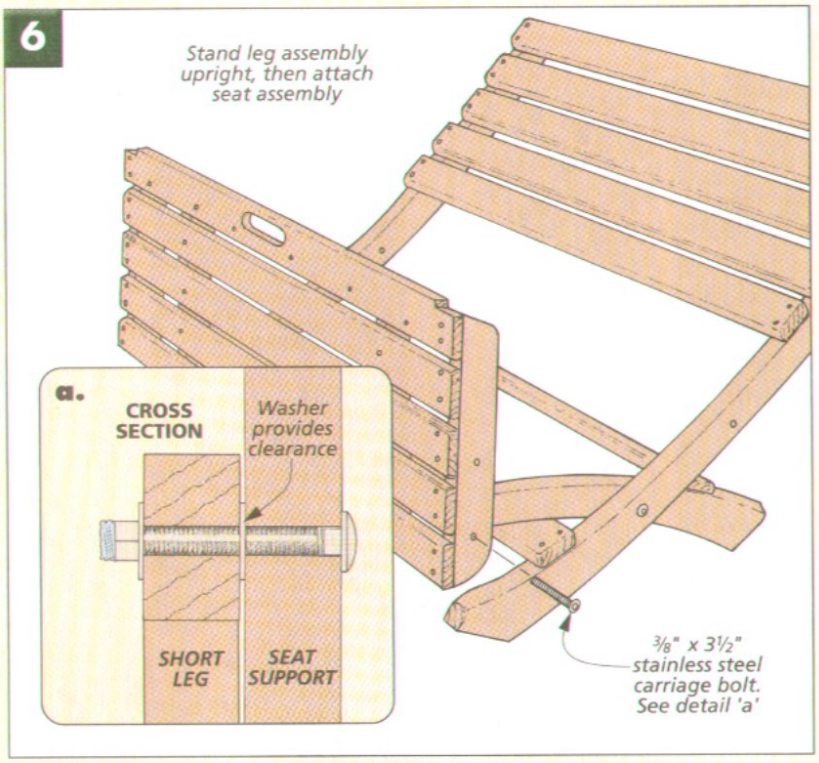

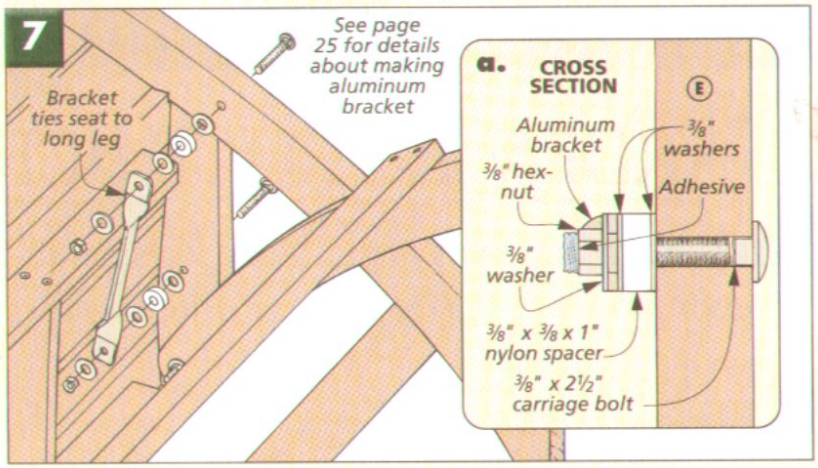

▲ *The bracket that ties the seat to the long leg starts as a flat bar (top). After drilling holes and rounding the edges (center), the bar is twisted to shape (bottom). All the details are on page 25.*

GO STAINLESS

The big advantage to using stainless steel hardware is that it won't rust like regular zinc-coated hardware. One thing to be aware of though, is that stainless steel screws aren't quite as strong as regular woodscrews. When you're working with a softer wood (like the cedar used for the bench), this shouldn't pose a problem.

But if you choose a harder wood, you can avoid breaking screws by drilling properly sized pilot and shank holes.

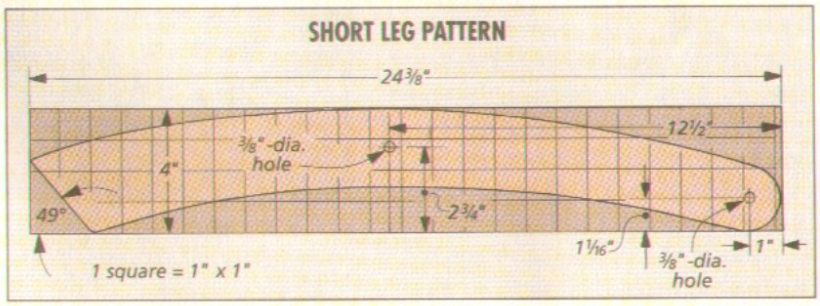

GARDEN LATTICE SCREENS

Ready-made materials found at the local home center make this versatile outdoor project a snap to make in a weekend.

This outdoor project is functional, attractive, and can be built in a weekend. Its design features ordinary dimensional lumber and premade lattice panels that can be found at most home centers and lumber yards. Each screen is a separate frame, but you can connect several of them together to make a tall privacy fence for your back yard or your patio.

Along with being modular, these lattice screens are also portable. I made some stakes out of aluminum angle that allowed the screens to be set up in the back yard or in the garden. The hinges also made them easy to disassemble, move around, or store away for the winter.

I made the screens out of "two-by" western red cedar and a 4x8 sheet of cedar lattice. Cedar is an excellent outdoor wood because of its decay resistance, but you could also use pressure-treated lumber.

FRAMES

The basic design is a frame and a floating panel, similar to a door. A simple stub tenon and groove joins the rails and stiles. The joints will be reinforced with screws along with a weatherproof adhesive.

STILES. The first pieces to make are the 72"- tall 2x4 *stiles (A)*. Each stile requires a groove down the middle of the inside edge (Fig. 1a). The width of this groove depends on the lattice you've purchased. Since thickness can vary, I oversized the groove for my ½"- thick lattice to ⅝" wide and ½" deep. This just makes the assembly that much easier.

I found the easiest and safest method to make this cut is on the

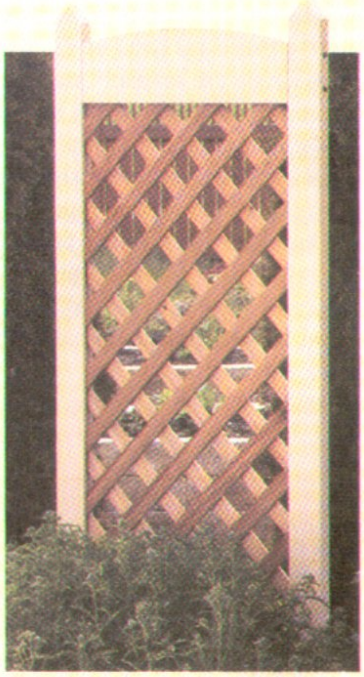

▲ *The modular design allows for a single screen, or for more to be added on later.*

table saw with a dado blade. Set the fence to cut the groove just off center of the stile, like in Fig. 2a. After running the workpiece through the saw, turn it around and run it through again to produce a centered groove. In order to make the 72"-long stiles a little easier and safer to handle through the saw, I used a featherboard to help keep them under control (Fig. 2).

FILLER STRIPS. The grooves at the top and bottom of the stiles are plugged (Fig. 1a) with *filler strips (D, E)*. They will align the rails during assembly later. I cut them the same size as the groove and glued them in place. The decorative miter on the top of the stiles was made with two 45° angles (Fig. 1a).

RAILS. With the stiles complete, I turned my attention to the rails. The *upper rail (B)* is cut from 2x8 stock and the *lower rail (C)* is a 2x6. After cutting the rails to length, grooves are cut in them to match the ones in the stiles (Fig. 1).

TENONS. With the dado blade still set up in my table saw, I turned my attention to making the tenons. I attached an auxiliary fence to the rip fence and one to my miter gauge. (Fig. 3). Position the rip fence for a 1/2"-long tenon. Then with the rail on its side, raise the blade until it's just level with the bottom edge of the groove, like you see in Fig. 3a. Test the tenon in the groove and adjust the setup if needed.

To add some more attractive detail to the frames, the upper rail gets an arc along its top edge. The arc peaks at 7" in the middle and 5 1/2" on the ends (see plan view below right).

To lay out the line, I used a thin flexible strip of wood bent to the shape of the arc. Then I traced the line with one hand while the other hand held the flexible wooden stick.

The arc can be cut on the band saw or with a hand-held jig saw. I try to stay on the waste side of the line. Then go back after and sand down to the line. Once the first rail is complete, I used it as a template.

The final step for the upper rail is to cut the 1/2" shoulder on the top edge of the tenon (shown on the band saw in the photo in the margin). Or a hand saw will also work.

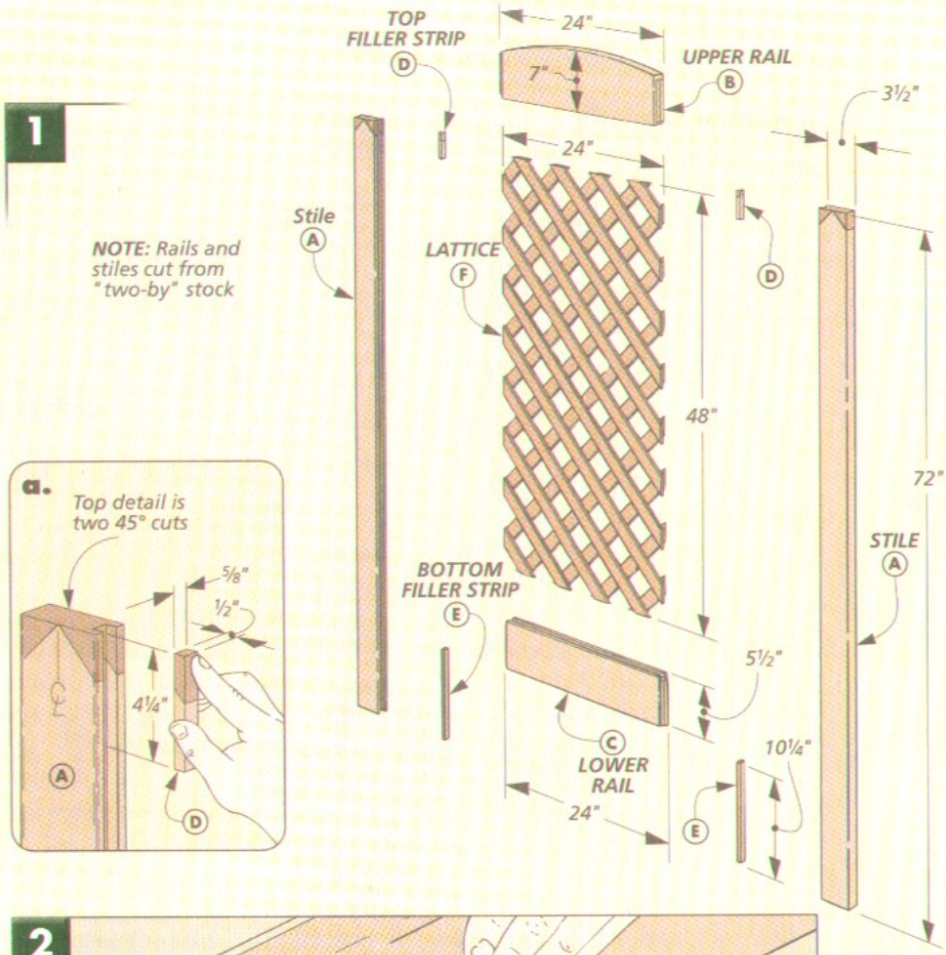

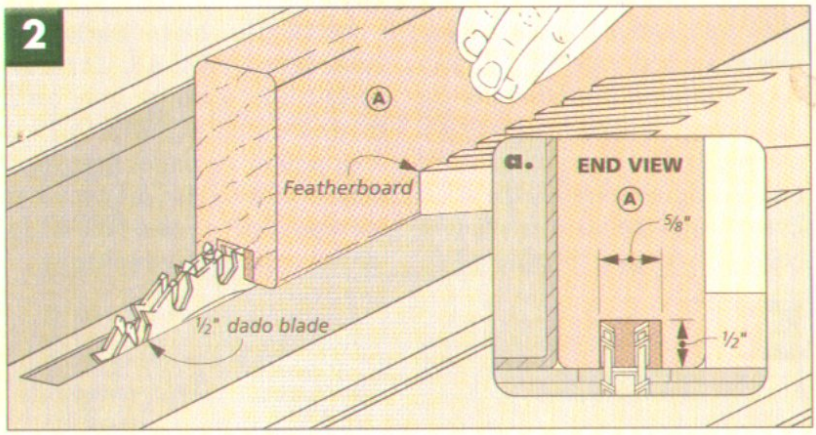

▲ *After roughing out the arc at the band saw, you can complete the tenon by cutting its upper shoulder.*

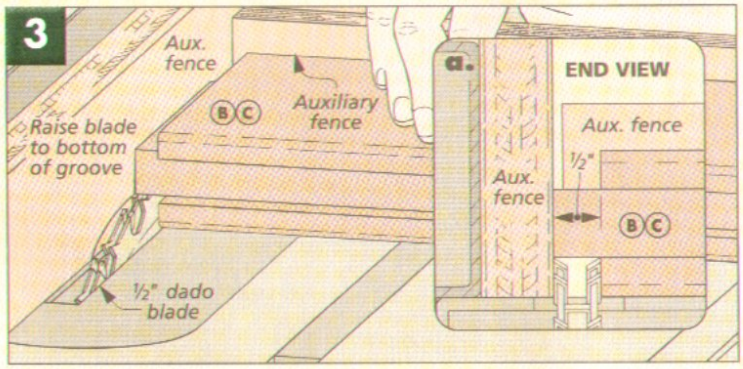

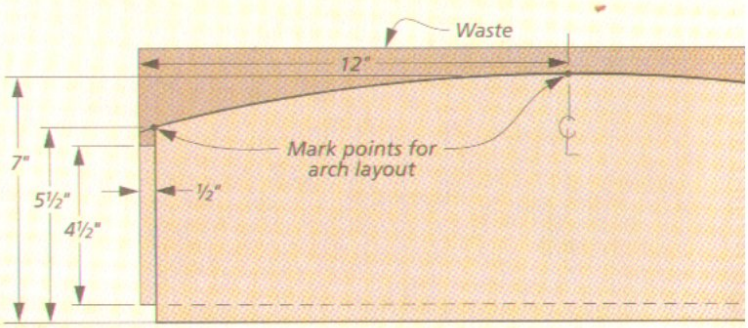

Lattice Panels

Now that the frames have been made, I turned my attention to cutting the *lattice panel (F)*, as shown in Fig. 4.

Cutting the flimsy panel can be tricky, so I used a pair of sawhorses and some 2x4s for support (Fig. 4). I set the depth of the blade on my circular saw for a ¾"-deep cut. There are two things to be aware of here, the first being the staples. As you can see in Fig. 4a, I marked my cut lines to avoid cutting into them. Second, take a little more care when cutting. The uneven surface of the lattice can be tricky.

FINISH. Since I wanted the lattice to end up a different color than the frame, I took the time to apply finish to the frames and lattice panels before assembly. I used an exterior-quality stain for the frames and a clear sealer for the lattice.

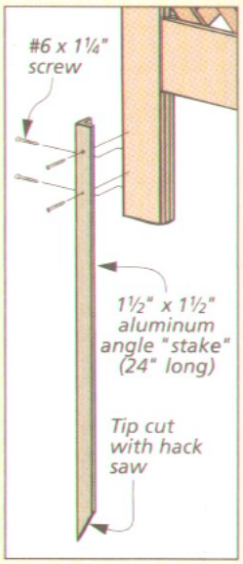

▲ *Since it's easy to cut and won't rust, aluminum angle was used for the stakes that anchor the screens.*

ASSEMBLY

Now with everything ready, it was time to put it all together. The filler strips now act as stop blocks for the rails during assembly. I dry-fitted and clamped the frame together so I could drill some pilot holes into the stiles. Even though the wood is soft, pilot holes keep the long screws lined up.

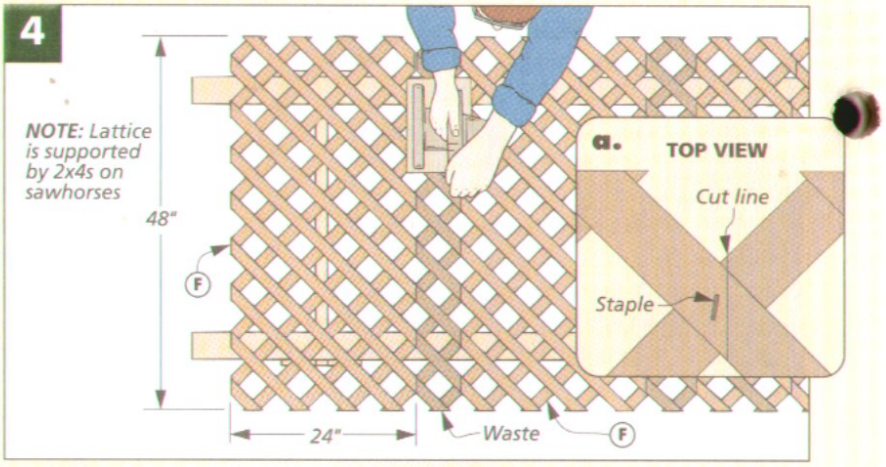

An exterior grade glue is the best choice for the joints. I didn't use any glue in the grooves, only on the tenons. The lattice should fit snug, much like a panel in a door.

The screws I used are designed for landscaping and other large timber projects. They might not be available everywhere, so take a look on page 35 for sources.

HINGES. The hinge hardware I chose is a very simple rustic pin and eyelet. The wrought iron rustic hardware goes well with this outdoor project. Its simplicity makes it easy to disassemble the panels for storage. And it also allows for adding on more screens later.

The hinges need to be offset from one another. The eyelet part of the set needs to be about ½" above the pin (Fig. 5b). This is so all of the screens will sit level.

STAKES. Since my original plan was to use these screens in the garden. I found that I needed a way of keeping them anchored to the ground. I used some 1½" x 1½" aluminum "L" stock found at the hardware store. I cut mine about 24" long and drilled some mounting holes near the top (see left margin). To allow these "stakes" to drive into the ground more easily, I cut the ends to a point with a hack saw.

I hammered these stakes into the ground with about 10 inches sticking above ground. This gave me enough area to screw them to the bottom of the stiles. Note. I placed them on the back side of the stiles to keep them out of sight. W

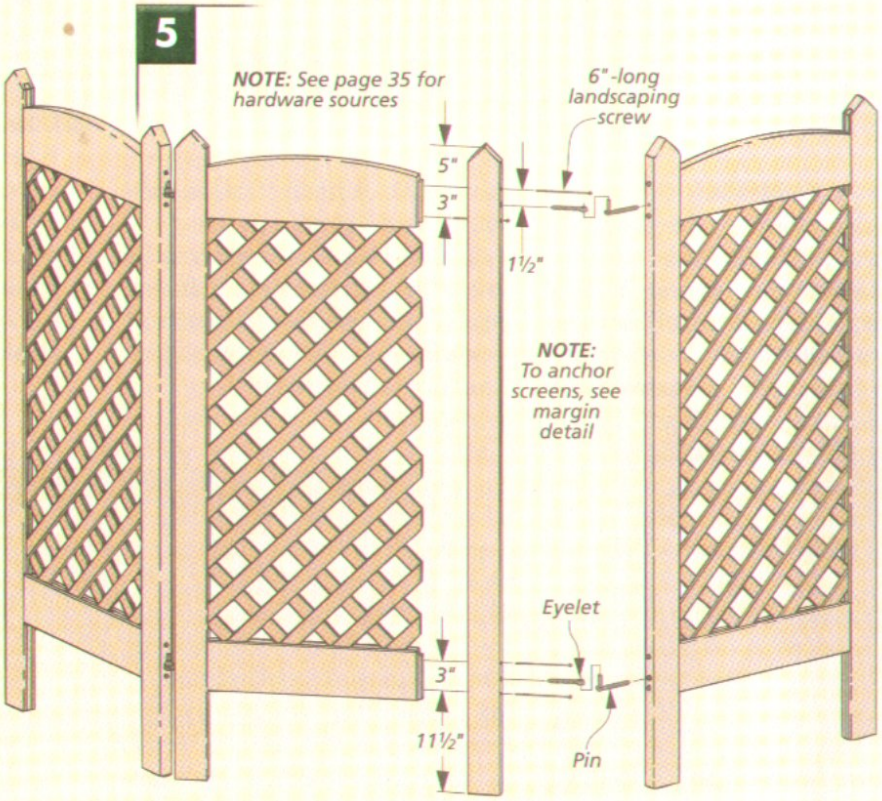

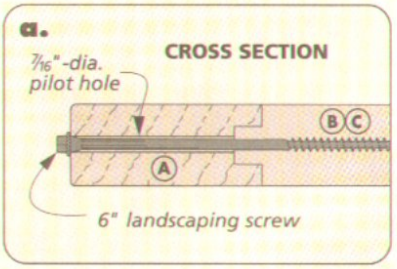

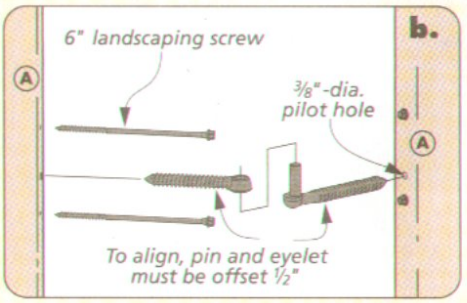

SOURCES

GARDEN LATTICE SCREENS

The hardware for the garden lattice screens (page 32) was purchased at a local home center. However, the landscaping screws are also available from *McFeely's* (see list). And if you can't find the exact hinges, a large, loose-pin hinge can be substituted.

FOLDING BENCH

To build the folding bench, all the hardware you need should be available at hardware stores and home centers. (Refer to the Materials list on page 27.) For sources of stainless steel fasteners, see the list at right.

FULL-SIZE PATTERNS. Full-size patterns of all the curved pieces of the bench are available as an On-line Extra at: www.Woodsmith.com. For only $4.95, you can download several "tiled" pages that can be aligned to form the full-size patterns. Plus, you'll receive free shop drawings for the folding chair shown at right.

Full-size patterns (and the chair drawings) are also available from *Woodsmith Project Supplies*.

Full-Size Folding Bench Patterns
8005-883 ..... $7.95 ppd.

▲ *Free Drawings. Order the full-size patterns for the folding bench (see left), and you'll also receive free drawings for this matching chair.*

TILE-TOP TABLE

Like the folding bench, the hardware for the tile-top table should also be available through a local home center. (If you can't find the pocket hole screws locally, see the list at right.)

If you would like to build a larger version of the tile-top table, you can purchase shop drawings for the four-tile table, shown below. Visit our website (www.Woodsmith.com) and click on the "On-line Extras" button where you can download these drawings for $4.95.

The drawings are also available from *Woodsmith Project Supplies*.

Four-Tile Table Drawings
8005-884 ..... $7.95 ppd.

ENTERTAINMENT CENTER

Selecting the hardware for the entertainment center was a particular challenge — contemporary hardware isn't as readily available as traditional brass hardware. Because of this, the nickel hinges were ordered from *Horton Brasses*, while the rest of the hardware (including the stainless steel pulls) was ordered from *Lee Valley*, see the mail-order sources at right.

POCKET HOLE JOINERY

Pocket hole jigs are fairly common, so you shouldn't have any trouble finding sources (see list). The *Kreg Tool Company* is one of the leading manufacturers of these jigs, and you can order directly from them or through several other sources listed at right.

Kreg includes their "large pad" face clamp with most of the jigs they sell. But you can also buy them separately, and you might want to look into one if you decide to invest heavily in a pocket hole "system." *Kreg* is also the only manufacturer of plugs, and they have both hardwood plugs and plastic caps available.

Kreg also offers several different types of screws. But any panhead, self-tapping screw should work. W

MAIL ORDER SOURCES

Similar project supplies and hardware may be ordered from the following companies:

Horton Brasses
800-754-9127
www.horton-brasses.com
Satin Nickel Hinges

Kreg Tool Company
800-447-8638
www.kregtool.com
Pocket hole jigs, drill bits, screws, & plugs, Face clamps

Lee Valley
800-871-8158
www.leevalley.com
Stainless steel pulls & Entertainment Center hardware (except hinges)

McFeely's
800-443-7937
www.mcfeelys.com
Landscaping screws, Pocket hole jigs, drill bits, screws, & plugs, Face clamps, Stainless steel fasteners

Rockler Woodworking
800-279-4441
www.rockler.com
Pocket hole jigs, drill bits, screws, & plugs, Face clamps

Woodcraft
800-225-1153
www.woodcraft.com
Pocket hole jigs, drill bits, screws, & plugs, Face clamps

WOODSMITH PROJECT SUPPLIES

To order a hardware kit from *Woodsmith Project Supplies*, please use our Toll Free order line, see below. It's open Monday through Friday, from 8 AM to 5 PM Central Time. Before calling, please have your VISA, MasterCard, or Discover card ready.

If you want to mail in your order, call the number below for more information concerning shipping charges as well as any applicable sales tax.

1-800-444-7527
When ordering, please use Key W136

Note: Prices subject to change after October 2001.

Woodsmith *on the web*

- "On-line Extras" - Plans, Patterns, & More
- Over 100 Woodworking Tips Online
- Visit Our Readers' Project Photo Gallery
- Project Plans You Can Download
- Catalog of Project Kits, Tools, Jigs & Plans
- Forums for Woodworking, Tools & Classifieds
- Links to Other Woodworking Sites
- Order *Woodsmith/ShopNotes* Back Issues

www.woodsmith.com

Online Customer Service
Click on Subscriber Services at
www.woodsmith.com

- Access your account status
- Change your mailing or email address
- Pay your bill
- Renew your subscription
- Tell us if you've missed an issue
- Find out if your payment has been received

FINAL DETAILS

Tile-Top Table. *It doesn't get any easier than butt joints and screws, and that's just how this table is built — with the help of a pocket hole jig. For step-by-step plans, turn to page 22.*

▲ **Garden Lattice Screens**. *Highlight a flower bed or hide an eyesore — just a day in the shop is all you need to build this attractive lattice screen. Instructions begin on page 32.*

Fold-Up Garden Bench. *A simple design means you'll be carrying this folding bench out of your shop in no time. Plans and patterns start on page 26.*

Sectional Entertainment Center. *Build this contemporary, three-section entertainment center — without any tricky joinery. To find out how, turn to page 6.*